This is a digital copy of a book that was preserved for generations on library shelves before it was carefully scanned by Google as part of a project to make the world's books discoverable online.

It has survived long enough for the copyright to expire and the book to enter the public domain. A public domain book is one that was never subject to copyright or whose legal copyright term has expired. Whether a book is in the public domain may vary country to country. Public domain books are our gateways to the past, representing a wealth of history, culture and knowledge that's often difficult to discover.

Marks, notations and other marginalia present in the original volume will appear in this file - a reminder of this book's long journey from the publisher to a library and finally to you.

Usage guidelines

Google is proud to partner with libraries to digitize public domain materials and make them widely accessible. Public domain books belong to the public and we are merely their custodians. Nevertheless, this work is expensive, so in order to keep providing this resource, we have taken steps to prevent abuse by commercial parties, including placing technical restrictions on automated querying.

We also ask that you:

+ *Make non-commercial use of the files* We designed Google Book Search for use by individuals, and we request that you use these files for personal, non-commercial purposes.
+ *Refrain from automated querying* Do not send automated queries of any sort to Google's system: If you are conducting research on machine translation, optical character recognition or other areas where access to a large amount of text is helpful, please contact us. We encourage the use of public domain materials for these purposes and may be able to help.
+ *Maintain attribution* The Google "watermark" you see on each file is essential for informing people about this project and helping them find additional materials through Google Book Search. Please do not remove it.
+ *Keep it legal* Whatever your use, remember that you are responsible for ensuring that what you are doing is legal. Do not assume that just because we believe a book is in the public domain for users in the United States, that the work is also in the public domain for users in other countries. Whether a book is still in copyright varies from country to country, and we can't offer guidance on whether any specific use of any specific book is allowed. Please do not assume that a book's appearance in Google Book Search means it can be used in any manner anywhere in the world. Copyright infringement liability can be quite severe.

About Google Book Search

Google's mission is to organize the world's information and to make it universally accessible and useful. Google Book Search helps readers discover the world's books while helping authors and publishers reach new audiences. You can search through the full text of this book on the web at `http://books.google.com/`

A 749,710

PROPERTY OF
University of Michigan Libraries
1817
ARTES SCIENTIA VERITAS

2 30

Johnson Ret.

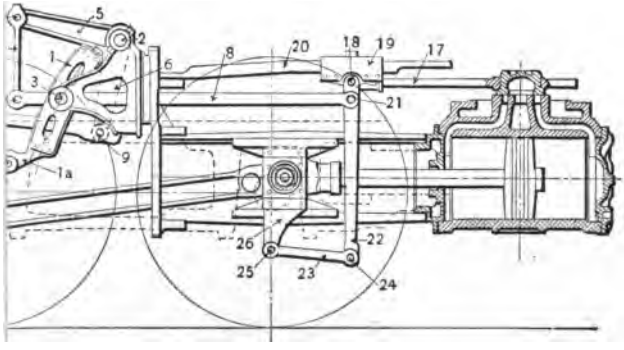

COMOTIVE VALVE GEAR.

ımes of Parts.

'ide Elevation.

Rod-Hanger Pin.
.od.
c Crank.
c Pin.
ank-Pin.
c Rod.
tem.
em Crosshead Pin.
em Crosshead.
em Crosshead Guide.

21, Radius-Rod Connecting Pin.
22, Lap - and - Lead Lever, or Combination Lever.
23, Lap-and-Lead Lever Connector, or Crosshead Link.
24, Front Connector Pin.
25, Back Connector Pin.
26, Crosshead Arm.

The Walschaert and Other Modern Radial Valve Gears for Locomotives

A PRACTICAL TREATISE ON THE LOCOMOTIVE VALVE
ACTUATING MECHANISM INVENTED BY
EGIDE WALSCHAERT

With the History of Its Development and Its Evolution into the Mechanically Correct Locomotive Valve Gear of the Present Day.

IN FIVE GENERAL DIVISIONS, EMBRACING:

Analysis of the Walschaert Valve Motion.—Designing and Erecting the Gear.—Proofs of the Superiority of the Walschaert Gear in Locomotive Service.—Catechal Questions and Answers for Instruction and Examination.

Modern Radial Valve Gears Other than the Walschaert, with Full Explanations, and Questions and Answers relative to Breakdowns and their Repair of such Gears, while on the Road.

BY W. W. WOOD, *Air Brake Inspector*

TRANSPORTATION LIBRARY
MAR 30 1927
UNIVERSITY OF MICHIGAN

THIRD EDITION, REVISED AND ENLARGED

Fully Illustrated with Sketches and Diagrams and Containing Large Folding Plates and Diagrams of Different Types of the Walschaert and Other Radial Valve Motions, with Movable Cardboard Working Models of the Valves.

NEW YORK
THE NORMAN W. HENLEY PUBLISHING CO.
4 West 45th Street,
1920

Transportation
Library

665
1912

COPYRIGHT 1906 AND 1912
BY
THE NORMAN W. HENLEY PUBLISHING CO.

Composition, Printing and Electrotyping by
PUBLISHERS PRINTING COMPANY, New York, U. S. A.

Transportation
Library

CONTENTS

FIRST DIVISION

PAGE

ANALYSIS OF THE WALSCHAERT VALVE GEAR . 11– 92

SECOND DIVISION

DESIGNING AND ERECTING THE WALSCHAERT VALVE GEAR 95–126

THIRD DIVISION

ADVANTAGES OF THE WALSCHAERT VALVE GEAR 129–148

FOURTH DIVISION

QUESTIONS AND ANSWERS RELATING TO THE WALSCHAERT VALVE GEAR 151–185

FIFTH DIVISION

SETTING VALVES WITH THE WALSCHAERT VALVE GEAR—THE THREE PRIMARY TYPES OF LOCOMOTIVE VALVE MOTION—MODERN RADIAL VALVE GEARS OTHER THAN THE WALSCHAERT —THE HOBART-ALLFREE VALVE AND VALVE GEAR, WITH QUESTIONS AND ANSWERS ON BREAKDOWNS—THE BAKER-PILLIOD VALVE GEAR—THE IMPROVED BAKER-PILLIOD VALVE GEAR, WITH QUESTIONS AND ANSWERS ON BREAKDOWNS 189–236

PREFACE

SINCE the first edition of this book was printed the Walschaert valve gear has been adopted, practically to the exclusion of the old link motion, on nearly every railroad in America; and its success, together with the actual necessity for an outside valve gear on the extremely large locomotives now in general use, has stimulated the development of other styles of *radial valve gear* of which the two most successful of this type are fully described in the present edition, with questions and answers explaining the proper method of procedure in cases of breakdowns of either style of gear while on the road.

And while *valve setting* is becoming a lost art except to the back-shop man since the general advent of radial gears, the question as to how valves with the Walschaert gear may be "set" is asked so often that it is now fully answered in this edition; and the knowledge is of decidedly more importance to the shop man at present, than to the locomotive engineer.

THE AUTHOR.

MARCH, 1920

PREFACE

In the capacity of an air-brake instructor, it has been the pleasure of the author of this book to endeavor to impart information on other mechanical and general railway subjects, as well as those relating to his special profession, to the railroad men with whom business has brought him in contact, and since the tendency of locomotive builders has been toward the introduction of the style of valve gear that was invented by Egide Walschaert many years ago, and never taken up in this country through sheer conservatism until the force of combined circumstances compelled its adoption, the many requests for information concerning that special device have revealed the fact that while there are legion of books devoted almost wholly to the so-called Stephenson link motion, there was not one book in existence given wholly to the subject of the Walschaert valve gear, and nothing in print that explained that style of motion to the satisfaction of the locomotive engineer, the shop man, and the master mechanic, alike; in fact, no treatise could be found that extended further than an elementary

description of the gear, and this book is the result of a determination to supply the deficiency.

The American Locomotive Company, and the Baldwin Locomotive Works, have issued from time to time pamphlets illustrating and giving the general dimensions of their recently constructed engines, and they have very kindly permitted the use of many of those plates for the purpose of illustrating the text of this work.

In that portion relating to the laying-out of the Walschaert gear for any particular engine, from the designer's or the shop-man's point of view, I have quoted and borrowed several illustrations from the very able paper read at the 1906 convention of the American Railway Master Mechanics' Association, by Mr. C. J. Mellin, Designing Engineer of the American Locomotive Company. This paper was written on the subject of Special Valve Gears other than the Stephenson link motion, and contained in a condensed form an exposition of the Walschaert principle of valve actuation modified by the requirements of present-day railway practice and the improvements suggested by progressive American locomotive builders. The Baldwin Locomotive Works were of great assistance to the author in furnishing twin diagrams of the Walschaert gear in connection with valves of outside admission and inside admission that would undoubtedly

be the chief and most interesting features of any treatise on this type of valve motion that could be written, and are reproduced directly from the models used in designing the valve gear at the greatest locomotive works in the world.

It would be natural to presume that the reader of this book, with interest enough in the Walschaert gear to prompt him to make an effort to secure information in regard to that style of valve motion, would already be possessed of at least a fair working knowledge of the principles of the common *valve* itself; therefore, the valve is herein treated superficially, except in its actions that may be peculiarly induced by the motion of the Walschaert gear.

THE AUTHOR.

FIRST DIVISION

ANALYSIS OF THE WALSCHAERT VALVE GEAR

THE WALSCHAERT VALVE GEAR

FIRST DIVISION

ANALYSIS OF THE WALSCHAERT VALVE GEAR

FROM the time of the building of the first locomotive engine, the methods employed to actuate the valve that is required to supply steam from the boiler to the cylinder, and discharge it therefrom after it has performed its work, were experimental and crude, until along about the year 1840 the double-eccentric hook-motion had naturally evolved into the shifting link action, under the name it has ever since borne—the Stephenson link motion; and in spite of our general lack of conservatism, that gear is, to-day, the vital part of practically all American locomotives, although our engines have increased in weight during recent years to such an extent that the necessary enlargement of the parts of the valve motion has given them a *tonnage* to be started and stopped twice in every revolution of the driving wheels that should have prohibited the use of such heavy reciprocating parts before now.

For this and other reasons, our locomotive builders have been casting about for some time in search of a valve gear more suited to modern conditions, with the result that many railroads have recently received new engines equipped with what is known as the Walschaert valve gear, a motion that was originated almost as long ago as the Stephenson link, and that has been in continuous and highly satisfactory use on European railways ever since; given desultory trials in America at intervals in the latter part of the last century by those prejudiced toward it, and dropped from sight, it has risen into our view again through a sheer necessity, and there is a general desire, now, to get acquainted with the principle of its operation.

About the year 1844—the transition period in the development of valve motions from the undecided to the accepted principles—Mr. Egide Walschaerts (the final s in his name has been dropped in its application to that type of valve gear), who was acting at that time as Master Mechanic of the Belgian State Railways, seems to have been dissatisfied with the results obtained from the use of two eccentrics in governing the motion of one main valve, and most likely foreseeing the possibilities in the line of economy by using the expansive power of the steam in the cylinders—something that had always been impossible of attainment with the hook motion—he invented the form of valve gear that

bears his name, and to-day it is uncommon to see a picture of a locomotive belonging to any railway of any country in Europe, that is not equipped with the Walschaert gear,—monuments of power, they are, proclaiming the genius of the inventor of that most vital part of the locomotive. Europeans have made the most of this device and have brought out its best points, and it is worth while to note that in practically every case their engines use the D-slide valve—or, at least, outside admission valves—in connection with the Walschaert gear: *There's a reason.*

Born in the little village of Mechlin, near Brussels, in 1820, Walschaert was but fifteen years old when the State Railway lines were extended to Malines, where the main shops were located; but railway mechanics appealed strongly to the young man, and it is known that he was employed in the State Railway shops in 1842, and that two years later, as locomotive foreman, he had gained an enviable reputation as a successful railway mechanical engineer. It was not long until he was appointed chief superintendent of the shops, and having gained this advancement at a bound, being still a young man and a master at his craft, it is a fact that has never been explained that Egide Walschaert remained at just this level in his profession for the rest of his life.

Neither did he patent his own device. It seems

that the State Railways would not permit a foreman—as he was in 1844—to make personal profit out of his own invention; so, his friend, M. Fisher, an engineer of the same company, made application in Walschaert's name, on October of the above year, for a patent relating to an improved valve gear, of which our present-day Walschaert motion is a close duplicate. The patent was allowed, and M. Fisher never claimed any credit for himself. It was in 1848 that Walschaert applied the gear to one of his engines and the results were all that he had anticipated. His device attracted attention throughout the Continent, and in due time came into general use on the principal railways of Europe. His engine equipped with the trial valve gear was the first one on the State railways to have a variable cut-off, for all of their other engines had the old hook motion, and as Egide Walschaert had never seen—possibly had never heard of—a shifting link, the problem that he worked out was greater than we, of to-day, can realize at first thought.

He was awarded a gold medal, and a diploma and honorable mention for his improved valve gear at the Exposition at Paris in 1878, and also at Antwerp in 1883. His death occurred at Saint-Gilles, near Brussels, on February 18th, 1901.

It has been said of the man whose mind conceived this theory of valve-actuating mechanism, that "Egide

Walschaert wrought better than he knew, for this gear now seems indispensable to meet conditions recently arisen because of the development of the locomotive in this country, of which the inventor could not possibly have dreamed. His work now meets a need which did not exist during the lifetime of the inventor, and for this reason he is entitled to credit for solving a problem of, to him, a future generation."

It is purposed here to explain the theory and action of Walschaert's valve gear, showing that his principle was not only an improvement on the old hook motion, but even at that early date was a better device than the modern, and commonly used, Stephenson link motion; to show it in as simple and plain a manner as possible, going through the process of its evolution from the common sawmill engine, that some of the readers hereof may have tended, and we will build up the Walschaert gear from it, ourselves, with the help of a few drawings and photographic views.

In taking up the study, or entering into an analysis, of any particular form of locomotive valve gear, it must be assumed that the principle of the plain steam engine in its most primitive form is already understood—at least, the valve itself. We will, however, start, in this building-up of our prospective Walschaert motion, with the plainest pattern of valve-actuating gear, and explain its actions so far as may be necessary

before its further evolution begins. As to the valve,—it is a study itself, separate from the subject of this article, but must be gotten acquainted with before starting into the subject of the mechanism that operates it; for, if the reader does not understand somewhat of the construction and functions of the valve, this is a step ahead of him—but a step that may easily be overtaken.

There are several different designs of steam valves, but all do practically the same work: that of admitting and releasing steam to and from the cylinder in which the energy of the steam is transformed into piston power—the power that makes the wheels go 'round.

With all of the common types of valve there are but two ports to the cylinder—one to each end—and while the valve is admitting live steam to the cylinder through one of these ports, it is discharging the exhausted steam from the other port, and *vice versa.* Usually, the direct exhaust port is located midway between the two steam admission ports. An outside admission valve is one that starts the piston moving in the same direction in which the valve is travelling at the time the admission port is opened, and the admission ports are opened *outside* of either end of the valve while during the same time the other end of the cylinder is discharging its exhausted steam through the cavity in the centre of the valve. Such a valve

may be either of the round, "piston" type, or the flat, plane-faced D-slide pattern. An inside admission valve does its work in exactly the reverse manner to that of the one just described, and all inside admission valves in common use are of the piston type, which in construction are really two ordinary pistons with metal packing rings, and with a tubular connection from one piston to the other; this connecting cylinder is usually made hollow in order that the pressure against the outer ends of the pistons will be held in perfect equalization and the valve be thereby more uniformly balanced; in some cases, however, the opening through this "spool,"—as the whole valve, complete, is termed,—is closed. It is claimed for the piston valve, by its friends, that it is a perfectly balanced valve—with an "open spool"; but while it is evenly balanced "fore and aft," the frictional surfaces with the steam pressure bearing against them—the packing rings—are not *balanced* at all; while a D-slide valve may have nearly all of its bearing surface balanced.

Lap is the distance by which the valve *overcovers* the steam admission port—the distance the valve must be moved from an exact central position on its seat before the port begins to open to admit steam to the cylinder.

Lead is the distance that the admission port is specially opened at the time when the piston is at an end—either end—of the cylinder, at the prime start—

or finish, both are the same—of its stroke. Lead is given in order that steam may be admitted between the piston and the cylinder head, toward the completion of the stroke, as a means of cushioning the piston and thereby tempering the sudden reversion of its motion; the same effect is, however, more economically produced by closing the exhaust from the cylinder at an earlier period in the finish of the piston's stroke, thus making use of the confined *dead* steam in its

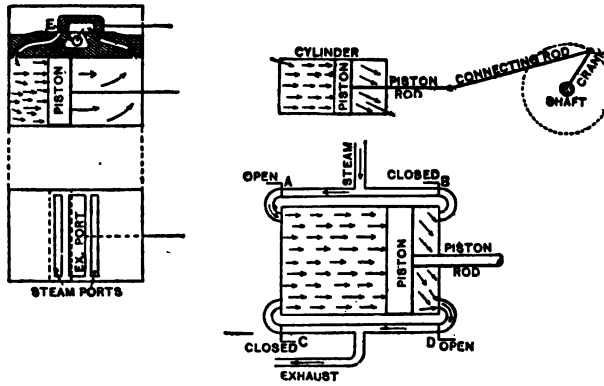

FIG. 1.—The Main Valve; showing admission and exhaust ports, the cylinder and piston.

compressible resistance as a cushion; this earlier closing is spoken of as the "cut-off" of the exhaust.

Cut-off more commonly has reference to the closing of the port for admission of live steam to the cylinder

and the point in the travel of the valve at which the cut-off occurs is fixed by the position of the link in the link-block, as will be explained later—when we have taken up the action of the valve *gear;* this position of the gear is, in turn, determined by the notch of the quadrant in which the reverse lever is placed. Fig. 1 is a simple sketch illustrating the theory of the main valve of an engine.

But it doesn't make any difference what kind of a valve is used in connection with the Walschaert gear any more than it does with the Stephenson link motion, and the former may be substituted on any engine in place of the latter gear without making any change in the valve, or cylinders, or any part of the steam-distributing mechanism. But, although either inside admission or outside admission valves may be used with the Walschaert gear, as the user may prefer, a better all 'round design of this gear can be produced when an outside admission valve is specified.

There is a difference, though, in "setting-up" the Walschaert gear as between the valves of inside and outside admission; a difference only in the position of the eccentric in its relation to the main crank-pin, and the connections, as they must be made, between the radius rod and valve-stem, and the combination lever; these points, however, will be explained at the proper time.

Fig. 2 represents the idea of "direct motion" in the valve-actuating mechanism, and is the simplest form of the common steam engine, with fixed cut-offs and non-reversible, and it will be the engine in the

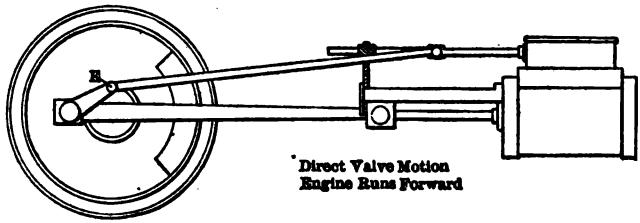

FIG. 2.—The Simplest Form of Steam Engine; Direct Valve Motion.

rough—the *rough ashlar*—that we are to develop, for, while this engine will run, and do very well under certain conditions, it is a wasteful power-producer and is limited to the last degree in the work expected of an engine: it can only turn its crank in one direction, and uses approximately as much steam each time that it turns that crank against a light load as it does when working against a heavier load. We are to supply those deficiencies noted, and bring it up to an equivalent of the engine that is on each side of a modern locomotive.

With any engine, the port opening for admission of steam to the cylinder must be one-fourth of the cycle of motion ahead of the piston. Therefore, if the

connection from eccentric to valve is through a direct line of motion, as shown, without any levers interposed or "rocker-arms" to reverse the direction of movement, then, with the main-pin in the position as shown in Fig. 2, the eccentric must be located at *E*, one-fourth of the wheel's circle, or 90 degrees, *ahead* of the crank-pin—assuming the engine to be running forward—to the right.

But before going further it is best to explain how to take the expression, in hearing it said that an eccentric is "ahead" or "behind" the main crank-pin:

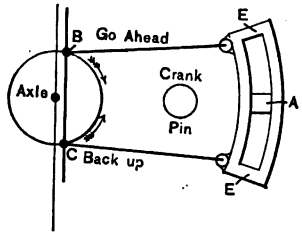

FIG. 3.—Location of Stephenson Eccentrics on Axle, in Relation to the Crank-Pin.

Fig. 3 is intended to represent the Stephenson link and eccentrics; any movement of the link-block *A*, gives a corresponding movement to the valve, so, if the link *EE* should be lowered, eccentric *B* would actuate the valve, and as this represents an "indirect motion" engine—that is, whichever way the link-

block is moved it will cause the valve to travel in an opposite direction, on account of the rocker-arms—not shown—the engine would run forward. As the wheel revolved to the right eccentric *B* would follow in the same direction and one-fourth of a turn behind the main-pin, and be said to be "a quarter behind the main pin," which it always is with indirect motion and outside admission valves, while with direct motion, such as is shown in Fig. 2, the eccentric is always—with the same kind of valve—a "quarter ahead of the pin."

Referring again to Fig. 3, if the link *EE* was raised, eccentric *C* would control the motion of the link-block *A*, and, through a reverse action of the rocker-arms, the valve; the engine would run backward—to the left—and, through the changes in conditions, the "back-up" eccentric *C* would now be *following the main-pin;* so that whichever way the wheel is being turned the eccentric that actuates the valve is a "quarter" behind the pin, in common locomotive design.

On locomotives having but one eccentric, as with those of the Walschaert type, the eccentric follows, or precedes, the main-pin according to the direction in which the wheel is turning: it may do either; so, during the course of this article when the location of the eccentric is mentioned as being ahead of, or follow-

ing, the main-pin, we will assume for the sake of clearer understanding that the engine is in all cases *running forward.*

It is understood that in Fig. 2 the valve is of outside admission; the eccentric *E* is just 90 degrees from the main-pin, and the valve is in an exactly central position on its seat—therefore without lead. If the steam throttle should now be opened, this engine could not move of its own volition, for two reasons: the valve being centred, all ports are covered and no steam would be admitted to the cylinder; working singly, the engine would have to be "pinched," or moved off the centre by hand, but in the case of double power, as in the locomotive, the engine on the other side would be in a position to start the wheels turning; they would turn to the right, the eccentric on the visible side would push the valve forward, and the back, or left, port would begin to open and admit steam to the cylinder against the back of the piston.

In starting the engine, if we should pinch the wheel backward, the eccentric would pull the valve backward also, and steam would be admitted to the *forward* end of the cylinder, pushing the piston back in spite of our efforts, and it would hold the main-pin on the back dead-centre point, as it was originally, as shown in Fig. 2. So that to make the engine run backward the turning of the wheel to the left must be made to

push the valve forward—the direction in which the piston will have to travel: and to accomplish this, the position of the eccentric must be changed to a point on the wheel exactly its opposite in location—90 degrees *on the other side of the main-pin*—a quarter-turn ahead of the crank *with the wheel turning backward.* This would now give the proper motion to the valve for running the engine backward, and of course the direction is fixed: it can only run that way.

Besides having no power to turn the wheel when the main-pin is on the dead-centre regardless of how much pressure is in the cylinder, the other reason for the engine not starting promptly, even when assistance should be given by pinching the wheel, is that the valve has no lead; the edge of the valve and edge of the admission port are not even close to line-and-line, and the assisted rotation of the wheel would have to push the valve a distance equal to the amount of *outside*, or *steam*, *lap*, before the cylinder could begin to receive steam through the admission port. So that valve-advance, or lead, will be the first requirement in remodelling the engine of Fig. 2.

In these reference plates we are using a "return crank" eccentric, which shows the exact point at which the valve gear receives its initial motion, relative to hub centre and main-pin, much plainer than an

eccentric of the Stephenson type would with its disk and strap around the axle; and in order to give this kind of an eccentric the advance necessary to secure lead, or overcome the outside lap, with outside admission valves we must *lengthen the return crank* slightly, but still keeping eccentric pin *E* the same distance from the hub centre.

Now, we find that the eccentric is more than 90 degrees from the main-pin, and that its advance that we have given has pushed the valve forward far enough so that the back—left port—is opened a very little—say, one-thirty-second ($\frac{1}{32}$) of an inch; steam is thereby admitted against the piston at the prime starting point of its stroke—while the main-pin is on the dead-centre, and the engine standing as in Fig. 2, with the exception, only, that we have given it *lead.*

Lead is not expected to help move an engine past the dead centre; it has somewhat the opposite effect—that of cramping, from the main-pin to the main shaft, or axle,—a braking effect, but this is not generally admitted. Lead not only cushions the piston at the end of the stroke, but also gets the power of the steam against the piston earlier at the beginning of the stroke, and the full opening of the admission port takes place sooner: The amount of advance of the eccentric necessary to secure the decided port opening for lead depends on the amount of outside lap of the

valve, because the advance of the *valve* must be exactly the distance of lap plus lead.

In Fig. 4 we have taken the engine illustrated in Fig. 2, and interposed the double rocker-arms be-

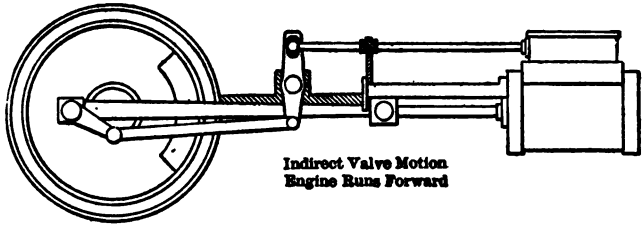

FIG. 4.—Simple Form of Steam Engine with Indirect Valve Motion.

tween the eccentric and valve, so that as the eccentric moves in one direction the valve travels in the opposite one; to make the engine still run forward the position of the eccentric is changed to a directly opposite point on the wheel—right straight across, through the centre of the hub, to the "lower quarter"; and as the main-pin moves up-forward, the backward motion of the eccentric will be reversed by the rocker-arms and the valve will, as required, still have a forward motion, admitting live steam to the back end of the cylinder and exhausting the contents of the front end,—either the *dead* steam that had been used in the preceding backward stroke, or the atmospheric con-

tents of the cylinder if this forward movement of the piston represented the first starting of the engine. These changes taken together have not changed the direction in which the engine will run.

But notice: We had lengthened the return crank of the eccentric, placing it more than 90 degrees from the main-pin, in order to secure lead and overcome the outside lap of the valve; if we now use the same eccentric the lead will be *negative;* instead of pushing the valve ahead, as it would do in Fig. 2, it would pull the valve back, to the left, in an engine like Fig. 4, giving pre-admission to the front end of the cylinder and holding the piston back—with the crank on the back dead-centre. To obtain lead with engines having a double rocker-arm and outside admission valves, as in Fig. 4, the eccentric must be *drawn nearer* than 90 degrees to the main-pin: be *less* than a "quarter" from it. The return crank must be shortened to secure lead.

And this proves that with any kind of valve motion where but one eccentric is used, lead cannot be satisfactorily derived from advancing or receding the position of that eccentric on the main-shaft or its relation toward the main crank-pin, unless the engine is to run in but one constant direction; if there is to be any method of reversion, the lead must be gotten otherwise. The Walschaert valve gear is actuated by

one eccentric only, and it is set, theoretically, at exactly right angles to the main-pin—90 degrees from it—and the lead is derived from the action of the piston, through suitable connections with the cross-head, the established lead remaining unchanged throughout the different points of cut-off in both forward and backward gear. The engine is of direct valve motion when the reverse lever is in the go-ahead position, and of indirect motion when the lever in the back-up notch, the reasons for this becoming apparent as the method for reversing the gear is understood.

Now, let's revert our attention to the crude type of engine shown in Fig. 2, again, for we are ready to begin the reconstruction of its valve gear into the Walschaert motion; we will take out the pin at the connection between the valve-stem and the eccentric rod and dropping the end of the latter slightly, connect it to the "combination lever,"—see Fig. 5.

With the combination lever in a plumb vertical position we will also connect the valve-stem to its extreme upper end, and while the combination lever remains at right angles to the valve-stem, the distance from eccentric to valve is not changed and its attachment has had no effect on the valve, which is central on its seat with both admission ports covered; but if we move the lower end of the combination lever

forward it will shorten the distance from eccentric to valve, or move it backward and the distance will be lengthened, and this shortening or lengthening of the line of motion will cause the valve to be displaced,

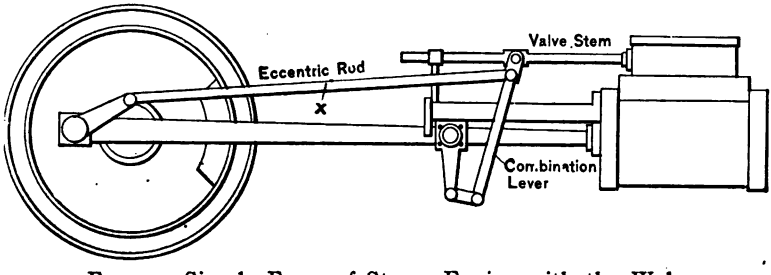

FIG. 5.—Simple Form of Steam Engine with the Walschaert method of Providing Lead.

either forward or backward, and open, somewhat, the front or back steam admission port enough for the lead.

All *true* levers have three points for the reception and delivery of power: at one point the original force is applied to the lever, while the other two are the resisting and transmitting points. We have the two latter points located as the connections of eccentric rod and valve-stem to the combination lever, while the point of application of power is at the lower end.

As it is the duty of the combination lever to modify the motion that the eccentric delivers to the valve, we must now connect the lower end of this lever to a source

of power in such a manner that its "interference" with the valve will be in the proper direction.

We must now disconnect the main rod from the main-pin and move the cross-head forward until the piston is known to be in the exact centre of the cylinder, and then connect the lower end of the combination lever (still in a plumb perpendicular position) with the cross-head by means of a short link-bar; now draw the cross-head to the back end of the guides again, and re-connect the main rod to the main-pin; we have now developed the engine far enough to be represented by the sketch in Fig. 5; the angle assumed by the combination lever has pushed the valve forward a distance that slightly uncovers the back admission port; and thus the Walschaert valve gear derives its lead—permanent lead, too, unaffected by any further changes in the gear that may be necessary in shortening the cut-off by the introduction of reversing mechanism.

If the outside lap of the valve amounts to one (1) inch, and the required port opening for lead is one-thirty-second ($\frac{1}{32}$) inch, the distance between the vertical lines through the centres of the pin holes in the upper part of the combination lever must—as the engine stands in Fig. 5—be just one and one-thirty-second ($1\frac{1}{32}$) inches, equalling lap plus lead.

As the engine starts forward under her own steam

we will note the results at each quarter-turn of the wheel. It must be remembered that the valve is acted upon by two distinct forces: the main propulsion, for its *long* travel, but this motion is qualified by the influence of the cross-head, exerted through the combination lever, and which would give a *short* travel to the valve even if the eccentric should be disconnected. When the crank—the main-pin—reaches the upper quarter where its leverage force is greatest the lower end of the combination lever is at the middle of its travel, and it would again stand plumb perpendicular but for the eccentric now being at its farthest point forward, and this has carried the valve to the finish of its forward stroke, leaving the back admission port and front port for exhaust wide open; the crank proceeds in its turning motion and when it has reached the forward dead-centre and the piston is at the front end of the cylinder, the eccentric will be at the lower quarter, and the valve *would* be once more centred on its seat—but for the alterative effect of that combination lever: its angle will be the reverse to the position of the lever as shown in Fig. 5, with the result that the distance from eccentric to valve will be *shortened* by that angle, and the valve drawn back exactly one and one-thirty-second ($1\frac{1}{32}$) inches (we are assuming that the valve has one (1) inch outside, or *steam*, lap, and one-thirty-second ($\frac{1}{32}$)

inch is expected to be the amount of port opening for lead), thus opening the forward port for the pre-admission of steam at the beginning of the back stroke just the same as it was given at the other end of the cylinder.

That is, the lead would be the same at the end of each piston-stroke, if the line of motion from eccentric to valve was a straight, horizontal level, which, in our *ideal* engine, it is not; in the practical design, however, this error is corrected, and our imagination must supply the deficiency until our valve gear is technically completed.

Just as the main-pin passes the bottom quarter and the eccentric is at its farthest point on the back stroke, the upper end of the combination lever still inclines backward and has drawn the valve to the finish of its backward stroke, with the front port opened for full steam admission and the back port open from the cylinder to the exhaust; a quarter-turn more brings the whole gear back to the original positions of the several parts as presented in Fig. 5.

We have described the action of the gear at four points in the revolution of the driving wheel—a complete cycle of motion—but those four points were taken at times when the steam ports were either wide open or only opened the distance required for lead; intermediately between those points occur the

interesting phases of *cut-off* and *release*, and further along in this book diagrams will be found, illustrating in a way most easy of comprehension the positions of the different parts of the Walschaert valve gear at *nine* particular points: a technical but plain analysis of the gear, in connection with both inside and outside admission valves. (See folder plates, Figs. 35 and 36.) It would be better, however, to defer the study of those diagrams until we have introduced the reversing mechanism, and built up the complete engine.

We have already completed a very nice working engine of the stationary type, but we must supply a method of shortening the travel of the valve so as to restrict the steam port openings when the engine is running fast or under a light load,—this for the sake of economy; while the means provided for so shortening the valve travel will, further, permit the complete reversion of the direction in which the engine will run.

For this we will cut the eccentric rod at about the point marked *X* in Fig. 5, and that part of the rod that is still connected with the return crank we will continue to call the eccentric rod, but the front section of the rod that connects with the combination lever will be referred to as the "radius rod." The word *radius* is applied to the distance from the centre to the circumference of a circle: a spoke of a wheel, for

instance, measured out from the hub centre to the periphery; one end of the *radii* is a fixed point,—the forward end of the radius rod is "fixed" at a point on the combination lever—with its other end rotating about it,—the back end of our radius rod will have a limited distance for rotation also.

The common double-eccentric gear—the Stephenson motion—has a "floating" link, with no fixed, unyielding point of resistance, and the pin by which it is suspended is not exactly in the centre of the link saddle, and from the latter fact and that at nearly every point in the cycle of motion, at any degree of cut-off, the action of the link is influenced by *both* eccentrics, the link describes those peculiarly curved lines of motion that are so mystifying to the student of valve gears.

With our single eccentric we are going to do away with a whole lot of those lines, and we will take that same old style of link and put the saddle-pin in the centre of the saddle and the link, and attach the pin to a fixed bracket, so that with no other connections the link could be rotated around on its pivoted centre.

With the Stephenson motion the curve of the link is made on a radius from the main axle upon which the eccentrics are mounted, so that as the link may be raised or lowered any point within it will be at a constant relative distance from the eccentric centre; the Walschaert eccentric, however, does not control

the radius of the link, and because the link does not change its position in relation to the axle, the curve need not be as it was, and we have reasons for curving it in the opposite direction—reasons soon to be shown.

First, we will hitch-up the link; we have suspended it at a point where, by setting it in a vertical position, its lower end can be connected to the eccentric rod, and having made this connection we have given a definite motion to the link; it is somewhat as though we had left the "back-up" eccentric, only, of the Stephenson gear still in connection with the link.

The link-block too has been retained, and to it we will attach the back end of the radius rod (see Fig. 6); now it will be apparent why we curve the ends of the link forward: with the link in a vertical position, as it stands, it must be possible to slide the link-block up and down from one end of the link to the other, carrying the end of the radius rod with it without producing any motion whatever at the front end connection of the radius rod with the combination lever. To make this possible the forward curve of the link must have a radius equal to the length of the radius rod. We have now completed the design of the Walschaert valve gear so far as it is represented by Fig. 6, except in supplying the mechanism by which the reverse lever may shorten the cut-off and reverse the motion.

In Fig. 6 the link-block and radius rod are at the lower end of the link, and there is, in effect, a straight line of motion from eccentric to valve, by which we have for the time a direct motion engine. As the wheel turns forward the eccentric will move the valve forward, just as if the link was not in the gear at all. If, however, the radius rod should be raised to the upper end of the link, the link itself would perform

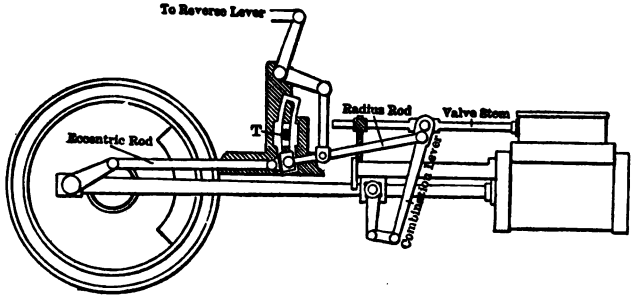

FIG. 6.—Building up the Walschaert Valve Gear.

the functions of a rocker-arm and the forward motion of the eccentric would draw the valve back; that would admit steam to the front end of the cylinder, and the wheel would have to turn the other way—backward—and *then* the eccentric would also turn backward, the link would change that direction of motion and again push the valve forward, admitting steam to the back end of the cylinder as it ought, showing that to reverse

the direction in which the engine runs it is only necessary to change the position of the back end of the radius rod to the opposite end of the link.

This raising and lowering of the radius rod and link-block is accomplished by connecting the bar that was once the link hanger to the radius rod, and when the reverse lever is thrown in forward gear the link-*block* goes down in the link, instead of the link itself sliding down on the block as it does with the Stephenson gear; and when the reverse lever is placed in a notch back of the centre of the quadrant the link-block rises to a point above the centre of the link, carrying the radius rod with it, so that when the eccentric moves in any given direction it will move the valve in the same or the opposite way according to whether the radius rod is below or above the centre of the link.

In Fig. 6 the engine is in full gear ahead, and the valve is given its full travel; in order to shorten the travel and thereby secure earlier cut-offs of admission and release, the reverse lever is hooked up nearer to the centre of the quadrant, and the closer the link-block will be placed to the fulcrum pin at the centre of the link, the shorter will be its travel forth and back, with the consequent shortening of the motion of the valve until, with the reverse lever in the centre notch and the link-block pin centred exactly with the fulcrum pin of the link saddle, the radius rod has ceased its motion,

and there will be no movement of the valve except that which is received from the motion of the combination lever.

With the Stephenson link motion the amount of lead given to the valve in full gear is steadily increased as the reverse lever is hooked up, and that is considered by many men to be one of its bad features; hooking-up with the Walschaert gear does not increase the lead, because it is obtained from the cross-head, and that is one of the desirable features that recommend this gear. If the motion work has been correctly designed and "set up," and particularly if the eccentric rod is of the correct length, when the engine is standing on either dead centre the reverse lever can be shifted from the farthest go-ahead position clear over to the back corner notch of the quadrant without disturbing the position of the valve, and this is because the eccentric at a point directly above or below the centre of the main axle holds the link in a vertical position, and any point in the link at which the link-block may be stationed will be at a common distance from the point represented by the pin connecting the front end of the radius rod with the combination lever—due to the curve of the link.

If we should set the reverse lever in the centre notch of the quadrant and have the engine moved by "pinching," or towing, as before stated, the eccentric would

not give any motion to the link-block, radius rod, nor valve, but the cross-head would, by means of the combination lever, give the valve a short travel that would be equal to twice the distance of lap plus lead.

The connections from cross-head and valve are made to opposite ends of the combination lever, and it is plain to see that when the piston is at either end of its stroke, the valve will be as far in the opposite direction as the angle of the short end (distance between vertical lines through the upper two pin holes) of the combination lever will carry it; this, as has been explained, is the distance necessary to overcome the amount of lap and then give the opening for lead, at each end of the stroke.

This method of reversing the valve motion of a locomotive is referred to by the English Professor, Mr. W. E. Dalby, in his most interesting book on *Valves and Valve Gear Mechanism* as "The Heusinger Von Waldegg, or Walschaert, valve gear." Where, and how, Herr Von Waldegg gained a claim to the distinction of having his name used in connection with a gear for which a patent was indirectly granted to Egide Walschaert is not explained by Professor Dalby.

Our engine is not perfect yet, as it stands in Fig. 6; there is an error to be corrected. Let us refer again to Fig. 2, the simple form of engine that we built up from, and we will note that the total "throw"

of the eccentric—the diameter of the circular path in which it travels—must be of the same length as the full travel of the valve, as there is nothing intervening to shorten or lengthen the motion; and this equality of motion is carried on, through Fig. 4 where both rocker-arms are of the same length to the nearly finished construction in Fig. 6—providing the engine shown in the latter plate is in full gear either way; and the *correct* full travel of the valve *should* be of the same distance as the throw of the eccentric, but—note the error:

If this engine should be moved one-quarter turn ahead, placing the main-pin on the upper quarter, the lower end of the combination lever would then be at about the middle of its path of motion, but the eccentric being at its farthest stroke ahead, the upper end of the combination lever would also have its farthest inclination ahead and the resultant angle would *lengthen the line of motion* between the eccentric and valve; this increases the travel of the valve at its forward stroke, and is the result of the method of obtaining that advance of the valve necessary in overcoming the lap, even if the lead, as pre-admission of steam, is not desired.

Move the engine so that the main-pin is on the lower quarter and the eccentric at the end of its backward stroke and the opposite effect will be produced;

the combination lever, centred at the lower end, will incline backward at its top end and the angle assumed in this case will *shorten* the distance from eccentric to valve, and this, on the backward stroke, increases the travel of the valve in that direction.

So, if the full travel of the valve and the full throw of the eccentric are to be maintained as equal distances—and they are—then the valve in Fig. 6 *overtravels* in each direction; we have not allowed for that and the question is, How can the travel of the valve be correctly shortened up and not create any other interference with the motion? Shortening the throw of the eccentric by changing it to a point nearer the hub centre would take away the increase of travel that was developed in securing the advance of the valve,—would it not?

Certainly; that would be a good way out of the difficulty—if we hadn't a better one: we can secure a double result in overcoming the error—"kill two birds with one stone."

With this gear the link generally sets rather high—higher than appears in the sketch—and when the eccentric is on the lower quarter there is a great and undesirable angle between the eccentric rod and the line of the valve-stem; horizontal lines through the centres of the main axle and the pin connecting the eccentric rod to the link are too widely apart, and

the result is an angle great enough to disturb the correct transmission of motion. So, let's leave the throw of the eccentric and the required full travel of the valve remain equal, as they should be, and now extend an arm down from the lower end of the link and connect the eccentric rod to its lowest point instead of to the link itself. We have completed the Engine Practical now, as it appears in Fig. 7, in which it is seen that with the reverse lever in full forward gear, the radius rod as far down in the link as it will go is not in line with the eccentric rod; this change has shortened the swing of the link and the carry of the link-block, and on some engines this foot of the link is so long that the reduction in link-block travel amounts to a great deal, but it only affects the *long* motion of the valve and does not interfere with the amount of lead supplied by the combination lever.

We have completed our task of erecting a design of Walschaert's valve gear that is applicable to an ordinary locomotive, and it is presented in Fig. 7 for technical study; it is of the same general type as the one we built up, in Fig. 6, corrected, with the position of the piston changed to the forward end of the cylinder. A vertical line is drawn through the exact centre of the valve seat and another similar line through the centre of the valve. The valve is shown displaced the distance required to open the admission port the

amount required for lead by the angle of the combination lever, and this advance of the valve is equal to the distance between the vertical lines through valve and seat; if now the combination lever were disconnected at its lower end from the cross-head—cut off from the influence of the piston—and drawn to an exactly vertical position, both pin holes at its upper end would be vertically even, and the centre lines through valve and seat would coincide, the valve being central on its seat and the lead eliminated. With an engine standing as in Fig. 7, the proportions of the combination lever must be such that the distance between vertical lines through the two pin-holes at its upper end must be the same as the distance between the vertical lines through the valve and seat as shown, with the valve moved back far enough to open up the admission port the resolved amount for lead; and this distance between centres of valve and seat must cover the measurements of both *lap and lead.*

Ideally, the position of the Walschaert eccentric is fixed at 90 degrees of the wheel circle from the main-pin, and if the foot, or lower extension that we have supplied to the link to which the eccentric rod is connected, was long enough that when the main-pin was on a dead point and the link was standing vertically the pin in the link-foot connection of the eccentric rod would be on a horizontal line through the centre of the

main axle, then the relative positions of eccentric and main-pin would be as stated; but the link foot seldom extends so far down, and to correct the results of the angle so produced in its effect on the motion of the link and valve, the eccentric is set closer to the main-pin than 90 degrees; this point will be more clearly explained and illustrated later on.

The oscillating link of the Walschaert valve gear differs from the shifting link of the Stephenson type constructively as well as in the direction from which its curve radiates. Fig. 7*a* illustrates a style of the Walschaert link that approximates the standard type that has been adopted by locomotive builders in this country, and is used, with only such variations as variance in the general engine design may render necessary, by the American Locomotive Company on all of their engines equipped with the Walschaert gear at this time, exactly as shown in the plate.

While the Stephenson link is an open, one-piece affair, and is simple in construction, suspended by a pin in the link-saddle on one side only, it is usually considered necessary for the Walschaert link to be supported by a trunnion on each side as a furtherance of stability. In Fig. 7*a*, the piece that forms the link is shown in side elevation *A* as 1*a*, and in end view *B* as 1*b*, and is forged from wrought iron that is afterward case-hardened. Referring to view *B*, the

two bracket pieces *2b* are shown to be bolted to the link piece, one on each side, their edges apparent in section *A* as *2a*, where they widen out to cover the link, although the central spread is to strengthen that part of the bracket which is the frame work of the link. These link brackets are cast steel, and each piece includes in its casting a trunnion, *3b*, in its exact centre, around which is pressed a case-hardened,

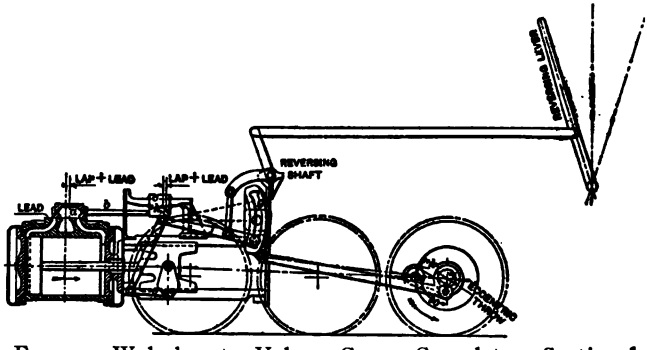

FIG. 7.—Walschaert Valve Gear Complete. Sectional elevation of valve and cylinder.

wrought-iron bushing; it is by these fulcrum-pins, or trunnions, that the link is suspended from a fixed point. At the lower extremity of the link piece—the link *foot*—is a pin hole, *4a* and *4b*, to receive the pin that connects the eccentric rod with the link, and this hole is fitted with a wrought iron bushing that is case-hardened. The reduction of the diameter of

these pins and pin holes from wear is but slowly effected if kept well lubricated, and is one reason why lost motion is so slow to develop in the Walschaert valve gear. Just above the pin hole 4*a* there is an oil well finished in the top of the link foot, 1¾ inches in diameter by 1¾ inches deep, with a ¼-inch hole drilled down from the bottom and through the bushing of the eccentric rod pin hole for the feed of the oil; a threaded cap nut is screwed into the top of the oil well as a cover.

In section *A* the dotted arc lines 6*a* show the outlines of the opening, or slot, in the link in which the link-block travels, and the faces of this link-slot is kept lubricated from an oil well in the top end of the link piece, this oil well being shown in dotted lines at 5*a* and 5*b;* it is covered by a cap nut that is a mate to the cover of the other oil well in the link foot, and has a threaded tap 1¾ inches in diameter. In section *B*, the left side of the link is turned to the outside of the engine, and the hole in the outside bracket at 7*a* and 7*b* is to permit direct oiling of the link.

The link-block is represented in sections *C* and *D;* *C* is the side view and shows the block in the position in which it would lie in the view *A* of the link,—imagine the link-block *C* raised, following the arc of the link until it entered the slot shown by the dotted lines 6*a*. Taking an end view, if the link-block, as shown in the section *D*, should be placed in the slot of

the link piece of section *B*, it would be seen that its edges were almost flush with the sides of the link piece—extending only $\frac{1}{32}$ inches out from each side of the link. It will be seen that the link-block contains an oil well, shown by the dotted lines at 9*c* and 9*d*, 1 inch in diameter by $1\frac{1}{4}$ inches deep, with a $\frac{1}{4}$-inch feed hole from it down to the link-block pin.

The radius rod lies in an exact line with the link, but at its union with the link the radius rod is forked, its jaws passing, one on each side of the central link piece, and inside of the bracket sections at *OO*. There is a pin hole through each jaw of the radius rod by which it is connected to the link-block, the pin that passes through the radius-rod jaws also going through the hole 8*c*, 8*d*, of the link-block, and this hole is supplied with a case-hardened, wrought-iron bushing as a protection against wear; but there will be no wear to the holes through the jaws of the radius rod for the reason that a bolt runs down through a hole in each jaw and through the link-block pin, thus holding the pin rigid with the radius rod and turning only in the hole through the link-block. The openings 7*a*, 7*b*, in the outer link bracket, besides giving access to the link slot for oiling, may also be used as an aperture through which the link-block pin can be removed.

Certain types of engines are so constructed that the eccentric rod is not in line with the link and cannot be

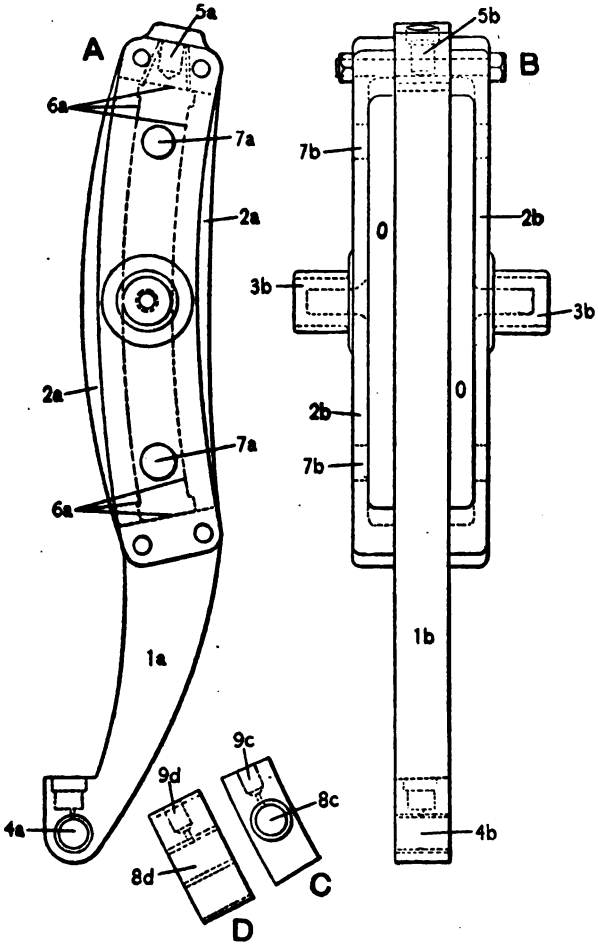

FIG. 7*a*.—The Walschaert Link.

connected directly with the link foot—such as the Baldwin engine built for the Rock Island Raiload, shown elsewhere in these pages—where the valve chest lies nearer the centre line of the engine than is usual; in such cases the link piece 1*a*, 1*b*, extends scarcely lower than its supporting brackets and there is no link "foot." The trunnion, 3*b*, on the *inner side* is also dispensed with, while the outer trunnion is made considerably longer and extends through a sort of journal box in the manner of the common rocker shaft, and to its outer end is attached an arm, or lever, to the lower end of which the eccentric rod is connected at the same distance below the centre of the link trunnion, or fulcrum, as it would be if regularly connected with the link foot.

While the foregoing matter covers the standard method of application of the Walschaert valve gear by American locomotive builders, there are variations, and referring to Fig. 8, it is seen that *Auchincloss*—whose book on various valve motions is considered an authority—sets the eccentric a quarter *behind* the main-pin instead of ahead of it as is usual with outside admission valves; but he reverses the effects of that change by carrying the link-block at the top end of the link when the engine is to run forward. The reversing shaft is below the link (like the old-time Rogers engines were fitted), with the lifting arm extending backward so

that throwing the reverse lever forward raises the radius rod, and the valve's action remains the same as with the style of gear adopted by American builders that we have analyzed. The *Auchincloss* type is common on European engines.

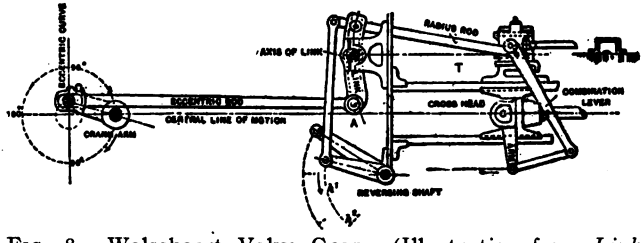

FIG. 8.—Walschaert Valve Gear. (Illustration from *Link and Valve Motions.*—Auchincloss.)

During the years that foreign railways have had the advantage of the use of this worthy device we have not been altogether blind to its merits: Certain progressive engine builders and master mechanics in America have endeavored to bring the Walschaert valve gear to trial, and some form of it was applied to quite a number of engines but never received a fair showing. Men were intrusted with setting-up the gear and maintaining it, and obtaining results from its use, that had found it the struggle of a half lifetime to master the mysteries of the Stephenson link motion, and, having learned it, placed an extravagant valuation on the mechanism that had been so hard for them

to thoroughly understand: and to find something better, that was as simple as the motion of Walschaert was hurtful to their self-conceit, and it was this priest-craft among railroad mechanics, and even officials, that choked down the honest endeavor of those who did try to improve that most vital part of the motive power of our railways. When William Mason presented a design of the Walschaert valve motion finely suited to the conditions of American locomotive construction, together with a paper detailing the good features of the gear, to the Master Mechanics' Convention in 1885, it met with a cool reception; in fact, without data of actual performance in evidence, the Walschaert motion was there generally condemned. The time was not ripe; they could afford to neglect it.

Shortly after this the railroad with which I was connected was supposed to have tested the merits of the Walschaert gear by putting that style of link, reversing gear, and combination lever on an engine that had been equipped with the Stephenson motion, but instead of connecting the Walschaert link with an outside crank on the main-pin, one of the old eccentrics on each side was used to operate the links, and thereby one of the best features of the device was omitted, and neither was it erected with reference to a scaled model. After a short time the old gear was restored, and there were no data afterward obtainable

to prove the success or failure of the half-constructed gear.

When it is decided to apply the Walschaert valve gear to any certain type of engine the design should be correctly laid out *and constructed from a diagram*, as the proportions cannot be tampered with by experimental changes without seriously affecting the correct working of the device. The only part capable of variation in length is the eccentric rod which connects the return crank with the link; this rod may be slightly lengthened or shortened, to correct errors in the location of the link centre, from centre of the driving axle which carries the return crank. This crank, representing the eccentric, must be permanently fixed to the main-pin, and the slightest variation in its position relative to the main-pin will be detrimental. When the engine is assembled, the throw of the eccentric should be checked up by the specifications, and any error should be at once reported in order that the mistake may be rectified by either correcting the position of the eccentric, or by a change in the design of the other parts to compensate for the error. It is probable that inattention to this absoluteness of detail required in the erection of the gear, as well as prejudice, is accountable for the condemnation of the Walschaert motion in the past.

Along in the early seventies the Mason Machine

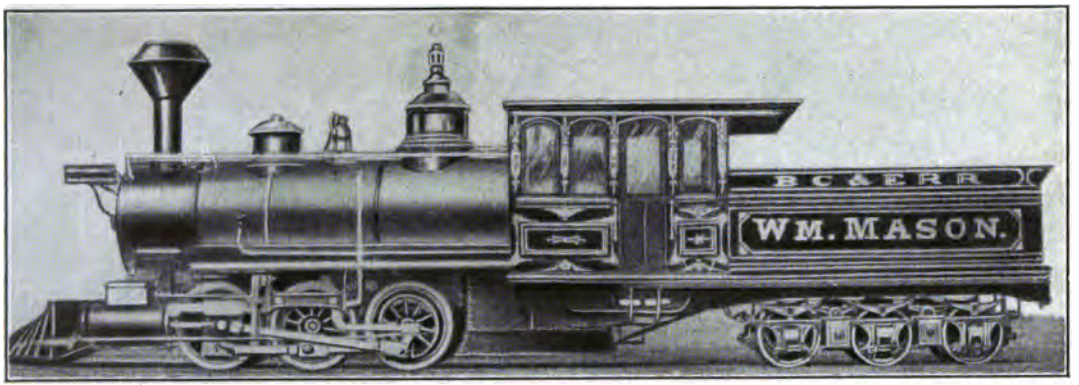

FIG. 9.—Mason Locomotive with Walschaert Valve Gear.

Company built quite a number of engines like the one in Fig. 9, and one—an exact duplicate of the one we present—was bought by the line on which I received my first railroad experience; her performance is a legend among the older employees of that road to-day; the work that engine was capable of doing as compared with other engines with the same-sized cylinders was almost unbelievable, and was never equalled before, nor since. Finally her boiler exploded near the roundhouse at the main terminal, and she was never rebuilt.

The engine was of the *double-truck* class, with boiler, cab, and tender on one common main frame, while the cylinders were carried on the separate driving-wheel frame that was free to rotate on its centre bearing that supported the forward end of the main frame, and it was through this centre bearing that the steam pipe passed, the exhaust pipe being made flexible. The entire weight of the *engine* was on the driving wheels, and the adhesion of those small wheels to the rails was unusually great and aided the power that was developed; but it is in the cylinders that the power of the engine originates, and they were not large—16 inches by 24 inches—and I believe that the correct distribution of steam by a properly designed and worthy style of valve gear had much to do with the production of power; the *results* were obtained, all right.

It will be noticed that the reversing shaft in this Mason engine lies over the top of the boiler, and the bar connecting the lifting arm with the radius rod is abnormally long, whereby, as the ends of the link are swung forth and back, the link-block is carried in a line very near to horizontal.

In Fig. 10 is illustrated the revised design of the Walschaert gear that was presented and described at

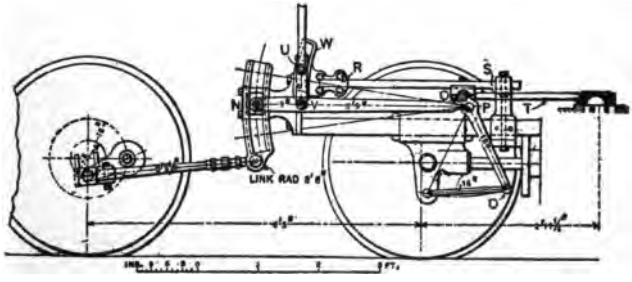

FIG. 10.—Mason's Improved Design of Walschaert's Valve Gear.

length before the Master Mechanics' Convention in 1885. Although a D-slide valve is used, the position of the valve chest is further in toward the centre line of the engine than is common, this inlying being more common to valves of the piston type. In order to deliver the motion of the combination lever to the valve-stem, the upper end of the combination lever is connected to the outside of the block *Q* which is bolted

to the sliding guide-bar *RS* and a pin extends inside from block *Q* far enough to engage with the end of valve-stem *T;* this detail, however, is of the lesser importance.

The greater import attaches to the mode of suspension of the radius rod *NP:* While the suspension bar of the engine in Fig. 9 is longer than is found on any other engines using the Walschaert gear, Mr. Mason went to the opposite extreme in this, his later design, and in Figure 10 the suspension bar *UV* is not more than one-half of the length of the link itself. It was found that the point of suspension had a great influence on the motion delivered to the valve, and this point regularly varied in most types of the gear from the effect of the different angles assumed by the reversing arm that raises and lowers the suspension bar, and also, in the case of double-truck engines like the one represented in Fig. 9, by the rotation of the driving-wheel frame while rounding a curve in the track. In the plan of Fig. 10, however, there is a stationary, curved link, or guide *W* taking its radius of curvature, like the main reversing link, from the pin *P* and also containing a sliding block which is attached to, and worked by, the connecting bar from the reversing arm. The upper end of the short suspension bar is connected at *U* with this sliding block, and at *V* its lower end is attached to the radius rod;

the pin *U* becomes the suspension point, and its arc of movement is equidistant from the arc of the main link-block, as the engine stands in Fig. 10, during all points of cut-off. The effect of this arrangement was expected to be the nearly uniform distribution of steam to and from the cylinder. It causes a remarkable slip of the link-block at each end of its stroke in working gear, either going ahead or backward, that was expected to equalize the alternate port openings, and it certainly does delay the motion of the valve at the end of its travel, holding the admission and exhaust ports more nearly fully opened at the time that they should be so.

In American locomotive design outside admission valves are generally of the plane seat, D-slide type, while for inside admission piston valves are, of course, the only kind used, yet the piston valve may be, and in a few cases is, specified for outside steam admission; but, in the latter case, the balancing of the steam pressures against the valve pistons being less perfect on account of the lessened area exposed to the live steam pressure on the back valve piston, due to the entrance of the valve-stem at that end of the steam chest.

Up to this time we have considered the Walschaert gear in connection with outside admission slide valves, while as a matter of fact, at this date the majority of

American locomotives equipped with Walschaert's device have inside admission piston valves, the builders, or purchasers, not taking the hint from European practice that the D-slide type of valve may be a component part of the Walschaert theory. To those who only understand this motion as far as our article has progressed, it may seem only necessary to reverse the positions of certain points of the gear in order to make the change from outside admission to inside admission valves, or *vice versa;* but that is not quite all that is necessary to secure the same motion and valve events; the change made in the connections to the combination lever and shifting the position of the eccentric has a result on the motion imparted to the valve that must be corrected.

It may be unfortunate that the Walschaert gear is coming into its own—if it can hold it—at just the time when the piston valve is a "fad" that like the proverbial dog must have its day. The combination of the two devices is not pleasing and is likely to detract from the good reputation that the Walschaert motion unhindered can make for itself.

It may be a pertinent question, just here, to inquire what are the advantages of the piston valve that was tried and discarded years ago, over the D-slide, plane-faced valve that has given, and is giving, such good service on all classes of engines. It is claimed that the

piston type is the only perfectly *balanced* valve. But *is it?* The parts to be balanced are those parts of the valve that confine the live steam; that the live steam presses against the valve seat; the parts that make the *steam joint.* Where is the piston valve balanced? It is only balanced where the live steam bears against its vertical sides, and in this respect, with outside admission, it has no gain over the D-slide valve, which also has sides fore and aft of equal area; and piston valves of inside admission have only the advantage in balance that is indicated by the absence of the interfering area taken by the valve-stem, and this is of small moment.

An unbalanced D-slide valve does have an enormous frictional resistance to movement on its seat due to the great area on top of it being exposed to the full pressure of live steam, but very few of such valves are in existence to-day, and probably none on the large, modern class of engines. The D-slide valve can be, and is, most nicely balanced, and may, if desired, have a balance of 100 per cent, which is not preferable, as the lifting effect of the exhaust steam under the valve must be counteracted upon.

With piston valves what stands between the enormous boiler pressure of steam that is now carried and the valve seat? The answer is "the packing rings." Are the packing rings balanced? They are not, and

cannot be, balanced. The grooves into which the rings are fitted must not be made absolutely steam-tight, and they fit looser as they wear; the live steam against the rings will go either under or over them: If the steam passes between the rings and the walls of the valve chest there will be a bad blow, and waste of pressure,—no packing. If the steam finds the other side of the rings, the rings will be pressed against the walls of the valve chest and the opposite side of the groove, and *pack* with a steam-tight joint, but with enormous *unbalanced* pressure. Calipering the inside diameter of the valve chest after piston valves have been in service for some time will prove the very great wear—greater toward the centre—and I have had the opportunity for *feeling* how hard it is to hook up such an engine under heavy throttle.

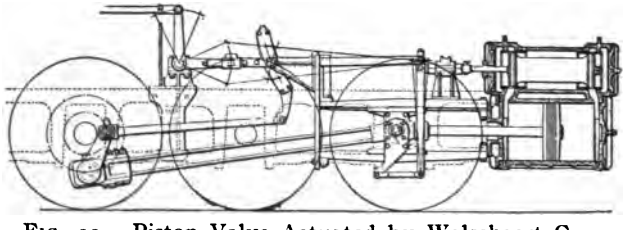

FIG. 11.—Piston Valve Actuated by Walschaert Gear.

In Fig. 11 we have presented a type of the Walschaert gear as applied to one of the latest built and heaviest freight engines in America, together with a

section through cylinder and valve, the latter being of the piston style, of inside admission.

With the reverse lever and link-block on their centres, the combination lever will also be centred—in an exactly vertical position—as shown in the plate, with the main piston at the perfect centre of its stroke—exactly in the middle of the cylinder. But the main-pin, as may be noted, is not now *precisely* on the point of "lower quarter," the slight variation being due to the angular position of the main rod, and if the back end of this rod was disconnected from the main-pin, and raised, the opening in the stub-end would centre exactly over the hub centre.

This angular offset of the main-pin produces a corresponding offset in the position of the eccentric because the radii through the main and eccentric pins are theoretically 90 degrees apart; but the eccentric is at a point now, where its variation is at right angles to the eccentric rod, and the deflection is of no moment. If the reverse lever should be placed in full gear ahead, or back, one of the steam-admission ports would be wide open; it would, indeed, be a finely adjusted gear in which the valve would feel the effect of that variation.

In Fig. 11, notice that the eccentric *follows* the main-pin by 90 degrees instead of preceding the pin by that distance, as heretofore; also, the upper end of the combination lever is connected to the radius

rod instead of to the valve-stem, the valve-stem and radius rod having changed places on the combination lever. These changes are made because the engine has inside admission valves, and as such, a valve must travel in an opposite direction, always, to the travel of a valve having outside admission, and the eccentric is placed a half-turn different, or a quarter *behind* the main-pin. When the piston is at the forward end of its stroke, the front steam port must be slightly open for the lead, and as the valve of outside admission must be pulled back in order to open the port, the valve with the inside admission must, conversely, *be pushed forward* to get the lead opening, to secure which action the valve-stem is joined with the combination lever *below* the radius-rod connection, thus having the effect of lengthening the line of motion between link-block and valve at this juncture, and thereby forcing the valve ahead.

With engines of the American type you can always tell, therefore, whether an engine with Walschaert gear has outside or inside admission valves by noticing the position of the eccentric in reference to the main-pin and the method of connecting the valve-stem and radius rod to the combination lever. This is nicely brought out in the plate representing the heaviest locomotive ever built (Fig. 12), the Mallet, Four-Cylinder, Articulated Compound built for the Balti-

FIG. 12.—Mallet Four-Cylinder, Articulated, Compound Engine. Built by the American Locomotive Co.

more and Ohio Railroad by the American Locomotive Company, in which the rear, or high-pressure, engine has a piston valve which we may know, by reason of the foregoing explanation, is of inside admission. The forward, or low-pressure, engine has a plane seat, D-slide valve, and is necessarily of outside admission, but anyhow, we should know this on account

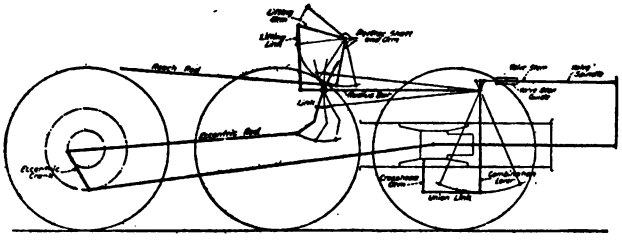

FIG. 13.—Diagram of Valve Gear, Low-Pressure Gear, or Forward Section of Mallet Compound Locomotive.

of the location of the eccentric and the connections at the upper end of the combination lever; and in Fig. 13 is shown an outline diagram of the latter—the low-pressure section of the engine—with the positions of the combination lever and link, and the lifting arm, at the different phases of a cycle of motion or revolution of the driving wheel.

As an illustration of the different ideas held by prominent American locomotive designers, compare Figs. 10 and 11: It concerns their opposite views

in regard to the supposedly important point of radius rod suspension. The Mason theory in connection with the guide for the point of suspension is that the suspension bar must be so extremely short as to admit of a pronounced swing to the radius rod. The American Locomotive Company's very recent production shown in Fig. 11, has no swing suspension whatever. The lifting arm of the reversing shaft has a block pivoted at its end which acts as a guide for the extended end of the radius rod, so that with the reverse lever in either gear, forward or back, the motion of the link as the engine works cannot cause any vertical shift of the link-block, and the only variation of the block from a true horizontal motion will be the slight amount due to the angularity in the position of the radius rod and the effect of the oscillation of the short (upper) end of the combination lever.

The engine built for the Chicago, Rock Island & Pacific Railroad, that is represented by Fig. 14, was built by the Baldwin Locomotive Works, and has the Walschaert motion and external admission, D-slide valves, but there is a variation here from the general manner of making the connection from eccentric to link: the eccentric rod is not connected directly to the "foot" of the link, but the trunnion, or fulcrum-pin, of the link has become a shaft, working in bearings in a "box," and to the outer end of this shaft is

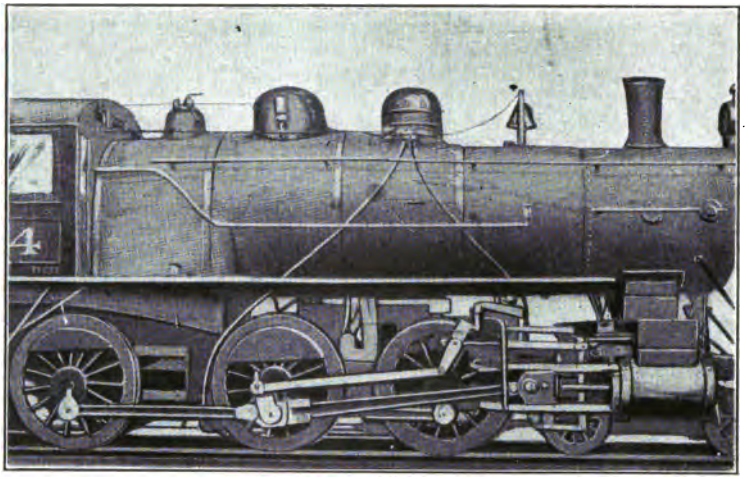

FIG. 14.—Engine with Walschaert Motion and Outside Admission Valves.

attached an arm extending downward and to the lower end of which the eccentric rod is connected, the radius rod and other parts of the gear remaining as usual. Such variations are sometimes found necessary for convenience in applying the gear to engines of peculiar construction, and one of the chief recommendations for the Walschaert motion is that it may be applied to any oddly designed engine with a minimum of change from the simplest model, and there is no conflict to expect with other parts of the machinery: An illustration of this, and the general adaptability of the Walschaert valve gear, is Fig. 15, a motor-car built for the Erie Railroad.

The locomotive exhibit at the Louisiana Purchase Exposition, at St. Louis in 1904, included the heaviest engine in the world, as represented by the Mallet Compound already referred to, and another one, typical of a class that has become renowned all over the world for swiftness—the French De Glehn Compound: Two engines, built for the extremely opposite in railway service—to be the fastest and to be the strongest; and that the valves of both are actuated by Walschaert's style of gear is proof that it was a mistaken theory, which was held by some, that it is only on certain types of engines, or those engaged in a certain class of work, that the Walschaert valve gear is in any way superior to the Stephenson link motion.

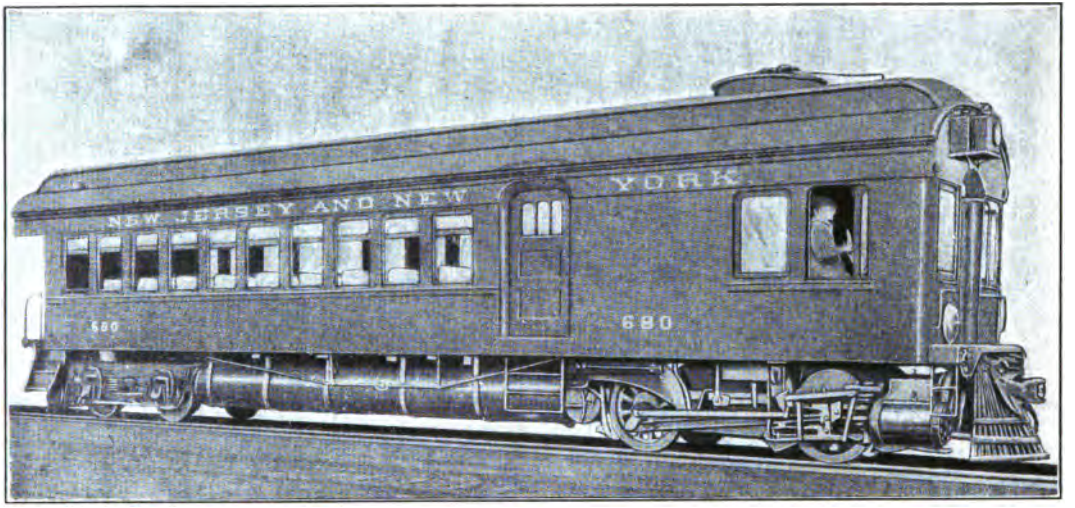

FIG. 15.—Erie Railroad Motor Car. Engine equipped with Walschaert Valve Gear.

The fame of the De Glehn Balanced Compound engine having reached America, the Pennsylvania Railroad ordered one from the French builders, and this is the one that was exhibited at the St. Louis Exposition.

The American purchasers specified that it should be exactly similar in design to the other engines of the De Glehn type running on the French lines, except heavier, as American express passenger equipment is much heavier than the European, and a few minor changes in detail were necessary in order to "make it fit" American tracks, and go where our engines will go. In spite of the fact, however, that this engine was built more heavy and powerful than the ones built for the French railways, it is hardly large enough to handle the very heavy passenger trains of the Pennsylvania lines, but with its proper load, with the lighter, but fast, service on certain divisions, it has been, and is, giving most excellent results; and the principle upon which the De Glehn engine is "balanced" is now being used with success by the Baldwin Locomotive Works in their Vauclain Four-Cylinder, Balanced Compound, and the Cole Balanced Compound engine built by the American Locomotive Works.

Fig. 17 represents the Walschaert gear that delivers the motion to the valves of the high-pressure cylinders

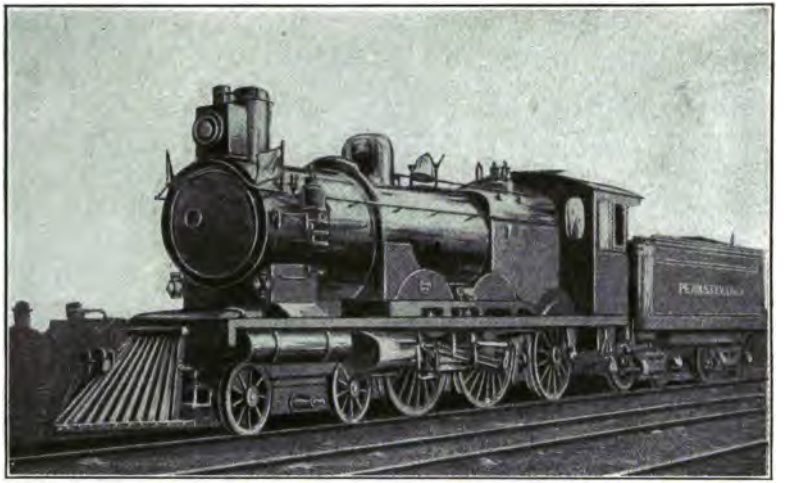

FIG. 16.—DeGlehn Balanced Compound. Pennsylvania Railroad.

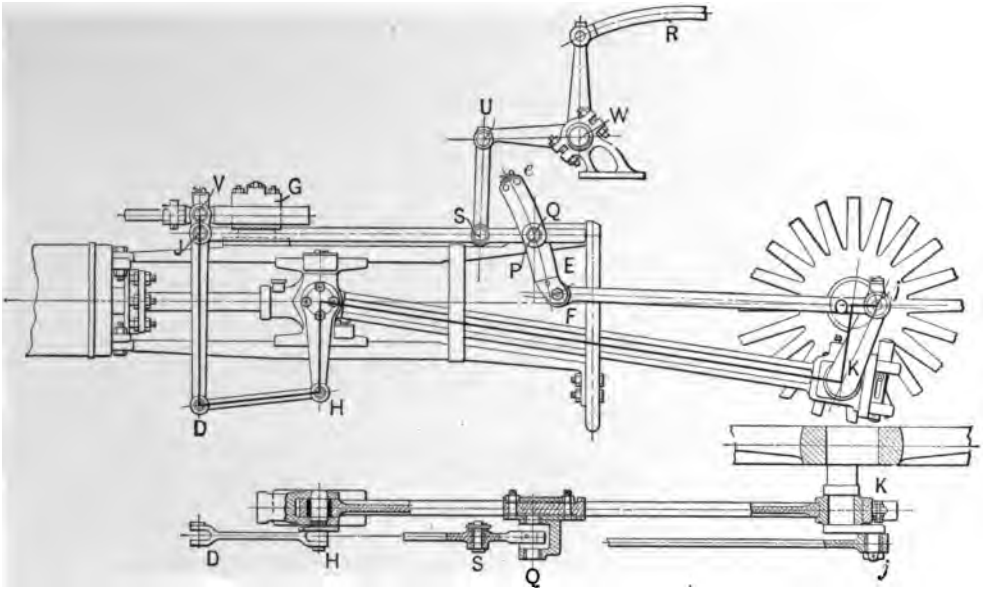

FIG. 17.—Walschaert Valve Gear for High-Pressure Cylinders of the DeGlehn Compound.

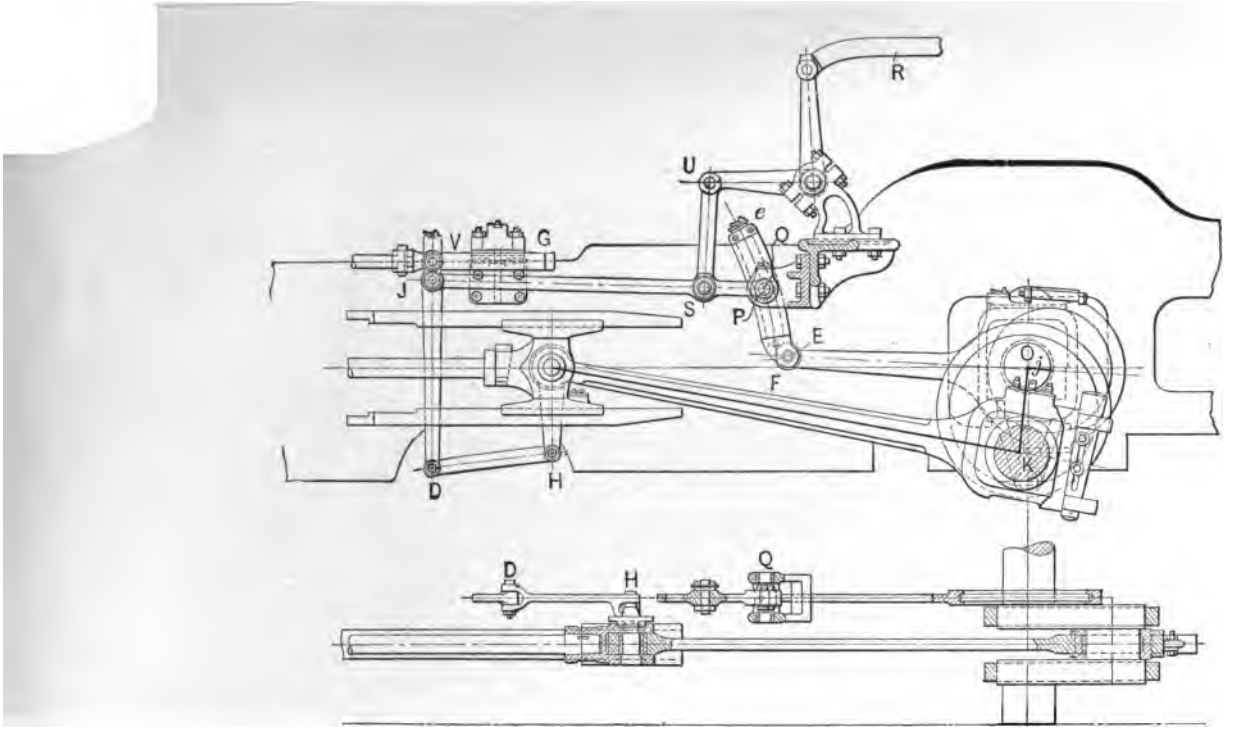

FIG. 18.—Walschaert Valve Gear for Low-Pressure Cylinders of the DeGlehn Compound.

of the De Glehn Compound, and Fig. 18 shows the same type of gear as applied to furnish the motion of the valves of the low-pressure cylinders. In the arrangement of the latter it is seen that the link is driven by an eccentric on the main shaft; this shaft is termed a "crank axle," because part of it is shaped to form two cranks to which the main rods of the two low-pressure cylinders (one on either side) are connected, and as the entire gear of the low-pressure, or *second expansion*, engine,—of the cylinders and valves, both—are *inside* of the frame, it was clearly necessary that the eccentric should be placed on the crank axle inside the frame, with sheave and strap exactly like the Stephenson eccentric, except, of course, that but one eccentric is used for each link. Outside of the frame the return crank on the main-pin actuates the valve gear of the high-pressure engine, which is the only part that can be seen in the photo-engraving Fig. 16.

At this date the most powerful passenger engine ever built is the one depicted in Fig. 19, a recent production of the American Locomotive Company for the Lake Shore & Michigan Southern Railroad, and of which some of the principal dimensions are appended; here, again, the Walschaert valve gear is in evidence; and the heaviest and most powerful switching engine in existence at this time, built for the same road by the

FIG. 19.—Prairie Type Passenger Locomotive with Walschaert Valve Gear. Built by the American Locomotive Company. The heaviest passenger locomotive ever built.

Loaded Weights.

On leading truck	24,400	pounds
On driving wheels	167,800	pounds
On trailing truck	44,000	pounds
Total engine	236,200	pounds
Tender	158,500	pounds

Dimensions.

Diameter of cylinders	21 1-2	inches
Stroke of piston	28	inches
Valves, piston type	internal admission	
Diameter of driving wheels, outside	79	inches
Total heating surface	3,905	sq. ft.
Grate area	55	sq. ft.

Working pressure per square inch, 200 pounds. Tender capacity, water 7,800 gallons, fuel 15 tons. Maximum tractive power, 27,850 pounds.

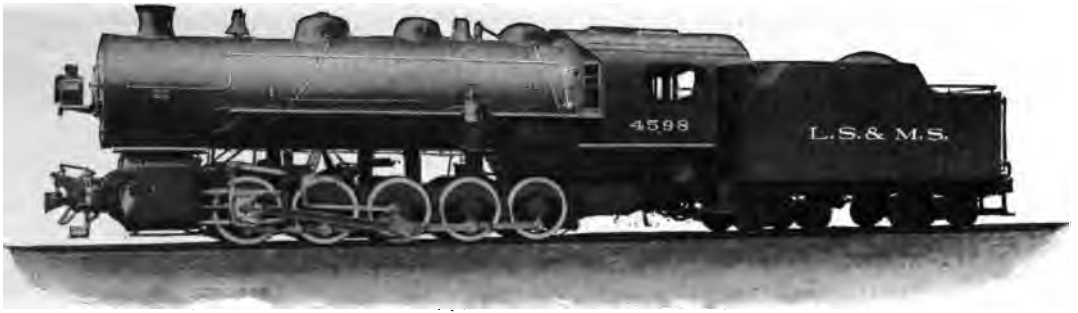

FIG. 20.—Decapod Switching Locomotive with Walschaert Valve Gear. Built by the American Locomotive Co. The heaviest and most powerful switching engine.

Loaded Weights.		*Dimensions.*	
On driving wheels	270,000 pounds.	Diameter of cylinder	24 inches.
Total engine	270,000 pounds.	Stroke of piston	28 inches.
Tender	149,600 pounds.		

Valves, piston type, internal admission. Diameter of driving wheels, outside, 52 inches. Total heating surface, 4,625.4 square feet. Grate area, 55 square feet. Working pressure per square inch, 210 pounds. Tender capacity, water, 8,000 gallons. Tender capacity, fuel, 12 tons. Maximum tractive power, 55,362 pounds.

same locomotive company, is shown in Fig. 20, and also is equipped with Walschaert's motion.

In all of the illustrations of Walschaert's valve gear so far shown, as applied to American locomotives, it will have been noticed that the link is invariably suspended from a bracket that is attached to the guide-yoke, and the valve-stem slide is also carried by the guides, this to insure permanency in the alignment of the gear; but with certain types of large freight engines it is sometimes inconvenient so to place the link bracket, and the American Locomotive Company have built quite a number of engines that have a very large casting extending across, under the boiler, that is really a strong cross-brace to the engine frame at the point where such a brace is most needed—an impossibility with the common link motion—and this casting is used to carry the link and reversing shaft. Some engines have this brace unattached to the guides, however, while with others it is attached rigidly to the guide-yoke, the latter type being represented in Figs. 20*a* and 20*b*, which are reproduced from the *American Engineer and Railroad Journal* and that journal gives the following description:

The illustrations show this new design so clearly that it needs but little explanation, and by reference to them it will be seen that the support for the small crosshead connecting to the valve-stem has been

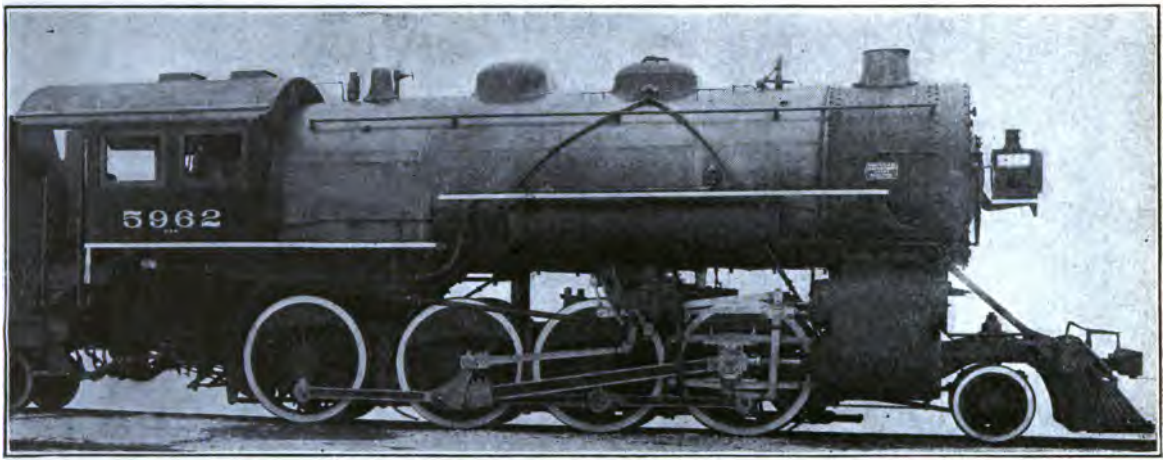

FIG. 20 *a*.—Engine with Walschaert Valve Gear and Strong Frame Brace.

placed on an entirely separate guide, which is fastened to the back valve chamber head and through an expansion link to the guide-yoke instead of having it supported directly from the main guide, as in previous designs. The bearings for the reverse shaft and the link have been placed near together in the same casting and the radius rod of the valve gear is operated through a hanger from the arm of the reverse shaft instead of a sliding joint, as was used before when the reverse shaft was supported in a bearing on the frame between the second and third pair of drivers (as in Fig. 11). The link itself has been made somewhat larger and more bearing surface given to the block. The casting forming these bearings is fastened to a massive but not excessively heavy steel casting extending across the frame. The construction of this casting and its dimensions are clearly shown in the illustration. To this is also fastened the yoke supporting the main guides. Another change is also noticed in that the arm from the reverse shaft, to which is connected the reach rod, extends downward instead of upward. This necessitates the reach rod being placed outside the driving wheels and on an incline from the reverse lever. It is supported and steadied by a guide at the throat sheet. A change has also been made in the return-crank connection at the main-pin for the purpose of permitting it to be more quickly and easily removed,

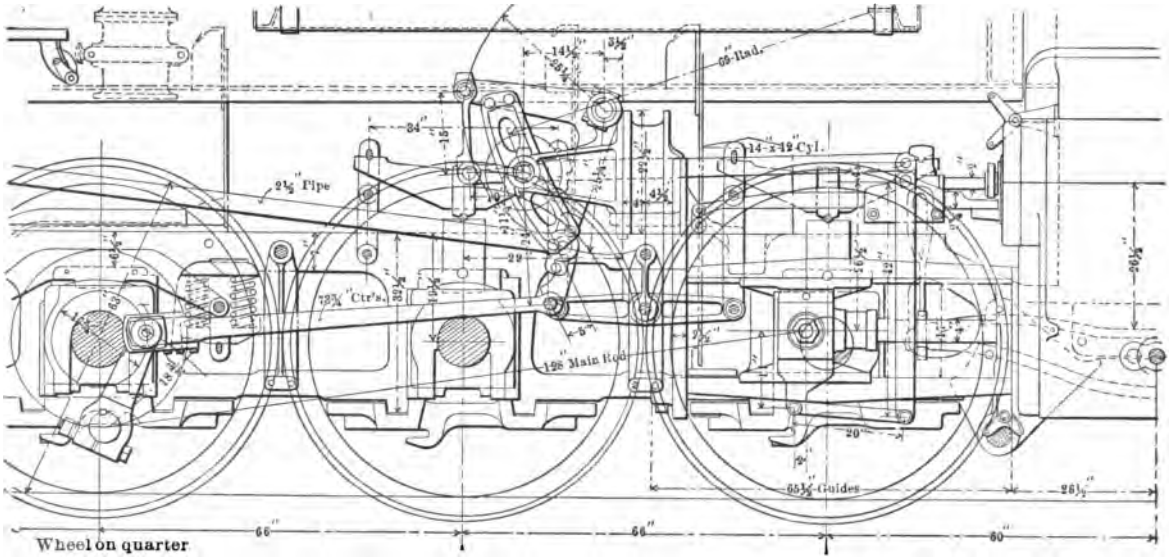
Wheel on quarter
66"
66"
60"
65½" Guides
26½"
20"
14"
14"
14

as it has to be whenever the rods have to be taken down. While the construction at the guide yoke appears to be very heavy and cumbersome, a careful examination of the drawings will show that it is really more simple than in previous designs of this valve gear, which were more open.

The most widely different classes of service have been represented thus far in the showing of modern engines that are equipped with Walschaert's valve gear, but as a further illustration of its adaptability to various conditions without serious alteration from the simplest design, as well as to bring to notice the fact that European railways are taking advantage of the possibilities that lie in the use of this gear, Fig. 21 is presented as one of a group of thirteen engines that were exhibited at the Exposition held at Liege in 1905, by the State Railways of Belgium—the same road that graduated the inventor of the motion—and this may be said to be a lineal descendant from Walschaert's successful experimental engine of 1848. It was constructed by the Societé Anonyme la Meuse, of Schenien, from the designs of M. Flamme, General Inspector, under the direction of M. Bertrand, Director of the State Railways, and is one of a number of engines built for experimental purposes.

The plate is reproduced directly from the June, 1906, issue of the *American Engineer and Railroad Journal*,

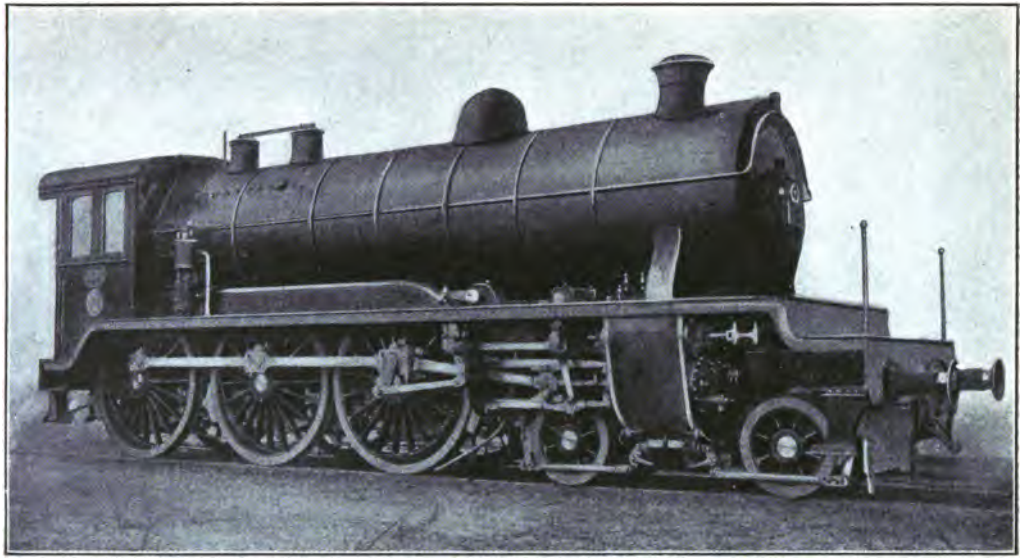

FIG. 21.—Four Cylinder, Simple, Balanced Passenger Locomotive, Belgian State Railways.

and represents a 4–6–2 engine with four *simple* ("simple," as the reverse of "compound," refers to the direct use of boiler pressure in all of the cylinders of the engine: where, no matter how many cylinders there are, their pressures are exhausted after the first expansive use) cylinders arranged on a horizontal line that centres through all four pistons and the main shaft, or axle; the main rods from all of the cylinders drive on the front axle, two of the cylinders outside of the frames—one on each side of the engine—having their main rods attached to the crank-pins, while the other two cylinders inside the frame are connected with a *built-up* crank axle; but with reference to their points of connection on the main axle the cylinders are arranged in pairs, the outside cylinder on each side and the one next to it just inside the frame are paired, with the crank-pin and the crank axle of each pair set 180 degrees apart, or just opposite each other on the shaft. With all moving parts in the cylinders, and the main rods, being exact duplicates in the matter of weights per pair, the motion on each side of the engine is perfectly balanced. The paired cylinders on one side of the engine are connected with the main-pin and axle crank at 90 degrees from the connections of the corresponding pair of cylinders on the other side for the same reason that the two main pins of the common two-cylindered engine are always set quarter-

ing to each other—so that *both* forces can never be on the dead-centres at the same time.

This plan of arranging the four cylinders and their delivery of power is being used on some of the most recently built American locomotives, but our engines are compounded, only two of the cylinders receiving boiler pressure direct: the Vauclain Balanced Compound, and the Cole Balanced Compound, both previously noted, are of this type, with the large, low-pressure or *second-expansion* cylinders outside the frame, and the smaller, high-pressure or *first-expansion* cylinders located inside, or between the frames; in *starting* a train—particularly a heavy one—the power of the cylinders termed *high-pressure* is temporarily suspended, thus removing an immensely twisting effect from the cranks in the axle at a critical time, and full boiler pressure at long cut-off is admitted to the large cylinders outside of the frame. After the train is under way, and the action is changed to *compound*, the inside cylinders receive direct boiler pressure and exhaust it into the large, outside cylinders in which the final expansive power of the steam is obtained, and from which the exhaust to the atmosphere takes place.

If the Stephenson valve gear is used on engines of this type it necessitates placing the eccentrics on some other than the crank axle, for there will not be room

left after considering the main cranks; and taking the power to actuate the valve from any other pair of wheels is highly undesirable, both on account of the extra amount of lost motion introduced and the entire disability of the engine in case one side rod should break, if it should be the section between the wheels to which the main rod is attached and the pair carrying the eccentrics—*on either side of the engine.* The application of the Walschaert gear eliminates the possibility of such troubles, as this gear has no dependence on the axle for anything, and the eccentric can always be placed on the main pair of wheels.

The assertion that the Walschaert valve gear can be applied to engines of odd design without addition of complicated parts, where the Stephenson motion would have to include so much more weight of metal as to be almost prohibited, is proven in the case of this Belgian engine in Fig. 21.

In this engine *live* steam is used in all of the four cylinders and the operation of each is controlled by a separate *piston valve* of *inside admission*—a design of valve quite unusual in European practice—and *both valves on each pair of cylinders* are actuated by *but one set of Walschaert's gear.*

To glance at the set-up of the gear in Fig. 21,—the eccentric placed ahead of the main pin and the valve-stem connected at the extreme top end of the com-

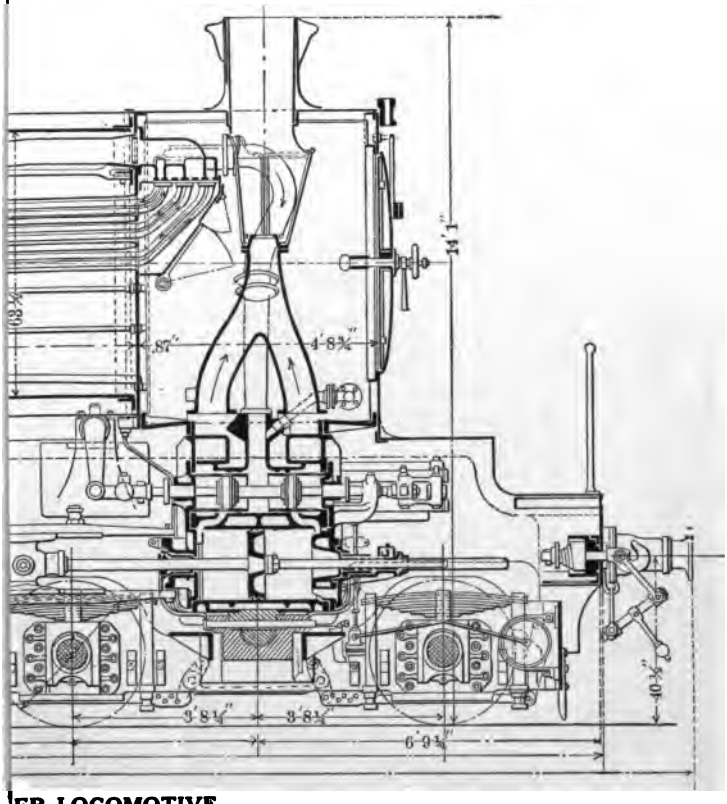

ER LOCOMOTIVE.

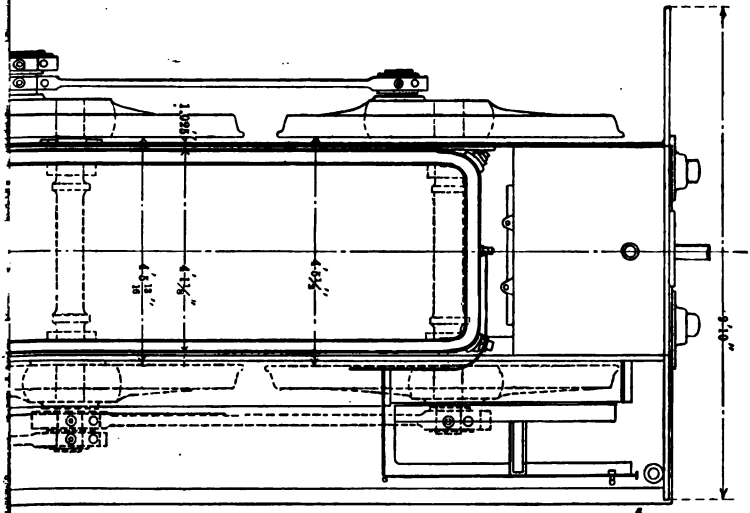

MOTIVE.

bination lever—one would think that outside admission valves were indicated, but in this case things are not as they appear to the eye: the motion of the

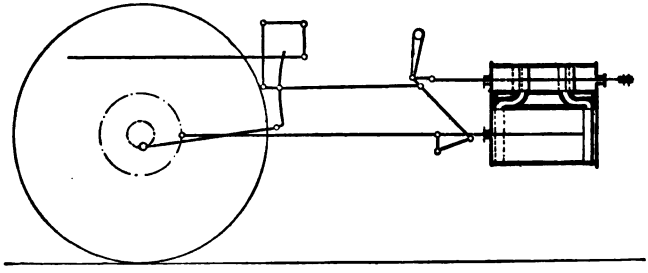

FIG. 24.—Side Elevation Diagram of Belgian Engine.

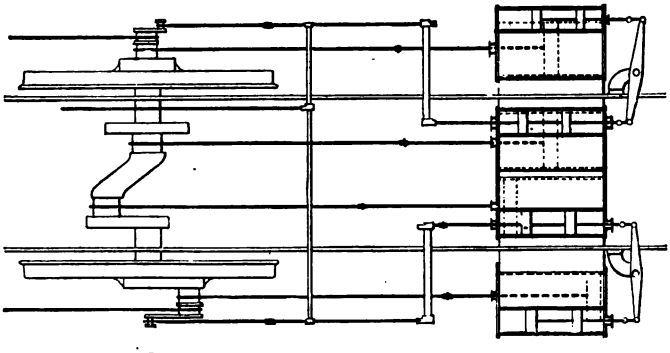

FIG. 25.—Plan Diagram of Above.

combination lever is not given to the stem of the outer piston valve, but is transferred through a rocker-arm to the valve operating the other cylinder of the pair—

the one inside the frame—and as the main rod from the inside cylinder is connected to the axle crank exactly opposite the main-pin connection of the outside cylinder—180 degrees apart—the set-up as shown is correct in its action on the *inner half* of the motion on that side of the engine.

Now, in order to supply a satisfactory motion to the valve of the outside cylinder it is only necessary to give it an exactly opposite movement to that of the inner one, and this is easily accomplished by extending the stem of the inner valve through the front head and connecting it to a lever that extends across the frame, a pin in the exact centre of the lever and a bracket attached to the frame forming its fulcrum, and to the other end of this lever is connected the extended rod from the outer valve, which also passes through its front steam-chest head. This action is the same for the pair of cylinders and valves on each side, and in the sectional views, on folding plates, Figs. 22 and 23, and the diagrams, Figs. 24 and 25, the valve connections are clearly seen.

In American practice the rocker-arm would undoubtedly be dispensed with, further simplifying the motion, and the gear so devised as to operate the outside valve and cylinder direct, using the lever connecting the extended valve-stems to actuate the inner valve.

The diameter of the cylinders is reduced to an

extent that both pistons of one pair have an area exposed to steam pressure of about the same number of square inches as would be contained on a single piston of an ordinary two-cylindered engine of the same weight and steam-generating capacity, and therefore the amount of steam consumed is the same for each type of engine, but this Belgian locomotive with four cylinders is perfectly balanced, and the rods, pistons, etc., need not be much over one-half the weight of the corresponding parts of a two-cylindered engine.

. . . . . .

To the name of Egide Walschaerts belongs the credit and the honor of having first conceived the *principle* of the valve gear that rightfully bears his name, but that principle has been more highly developed by others, until the device as it is applied to locomotives at the present time is practically perfect; but in order to show that there has been no actual change in the original Walschaert theory, the following bit of history is here reproduced from the *Railroad Gazette* of November 24, 1905, and is contained in an article on the life and works of the inventor, by Professor M. J. Boulvin of the University of Ghent:

After Walschaert had obtained (through the assistance of his friend, M. Fischer) his Belgian patent, he took out another patent for the same invention, on October 25th of the same year, in France. There also

exists among the documents left by the inventor a contract signed by Demeuldre, at Brussels in 1845, from which it appears that he undertook to obtain a patent of importation into Prussia for the new valve motion, subject to an assignment by Walschaert of half of the profits to be deducted from the introduction of the new valve motion in that country. It is probable, however, that this contract was never carried out.

The design attached to the Belgian patent is reproduced in Fig. 26. In this primitive arrangement the link oscillated on a fixed shaft, in regard to which it was symmetrical, but it had an enlarged opening at the centre so that only at the ends was it operated without play by the link-block, which was made in the form of a simple pin. There was only one eccentric, the rod of which terminated in a short T carrying two pins. The reverse shaft operated the eccentric rod and maintained it at the desired height. For one direction the lower pin of the T engaged in the lower end of the link, and to reverse the engine the rod was raised so that the upper pin engaged in the upper end of the link. The angle of oscillation of the link varied with the position of the pin in the link, and this oscillation was transmitted by an arm to the combination lever, which was also operated by the crosshead.

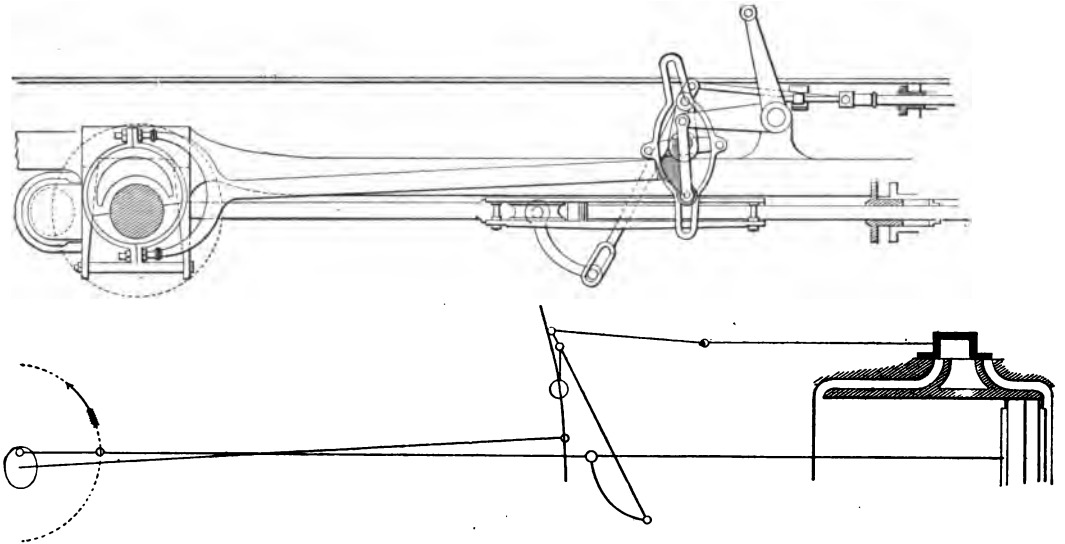

FIG. 26.—Original Design of Valve Gear as Patented by Egide Walschaerts. With Diagram.

The central part of the link could not be used for the steam distribution, as it was necessary to enlarge it to allow for the play of the pin which was not in operation. It may be asked why the inventor used two separate pins mounted on a crosspiece on the end of the eccentric rod instead of a single pin on the centre of the rod which would have served for both forward and backward motion without requiring the centre enlargement of the link. It must be borne in mind that the raising or lowering of the eccentric rod by the reverse shaft was equivalent to a slight change in the angular advance of the eccentric. Consequently, with a link of sufficient length, to keep down the effect of the angularity it was necessary to reduce as much as possible the movement of the eccentric rod. Notwithstanding its differences the mechanism described in the patent of 1844 is in principle similar to the valve motion with which every one is to-day familiar, and which the inventor constructed as early as 1848, as is shown by a drawing taken from the records of the Brussels shops, on which appears the inscription "variable expansion; E. Walschaerts' system applied to Locomotive No. 98, Brussels, September 2d, 1848."

Fig. 27, taken from this drawing, shows the valve motion as we know it to-day. For although it is true that the link and the combination lever are usually placed in a different position so as to shorten the

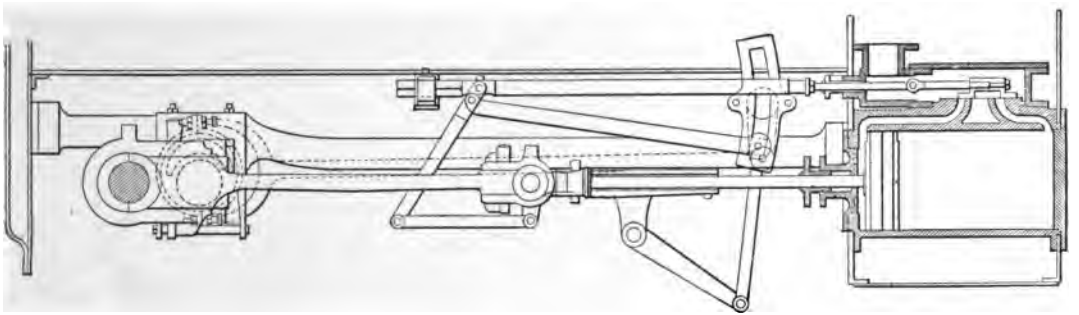

FIG. 27.—Modernized Arrangement of Walschaerts' Original Design.

eccentric rod and the valve-stem, yet the design of the locomotive often requires an arrangement similar to that shown above. The system which Mr. Heusinger Von Waldegg invented in 1849, and which he applied in 1850 to 1851, differs only in a few insignificant particulars from that shown in Fig. 27. Walschaerts had therefore preceded him.

SECOND DIVISION

DESIGNING AND ERECTING THE WALSCHAERT VALVE GEAR.

SECOND DIVISION

DESIGNING AND ERECTING THE WALSCHAERT VALVE GEAR.

WHEN a newly equipped engine with Walschaert valve motion is received by a railroad and after the gear has been set up complete at the roundhouse, everything should be carefully inspected, with the view of securing a perfect initial adjustment of the entire valve motion, and to eliminate, if found, any slight error whatever *while the other parts of the motion work of the engine are new* and of perfect fit and properly adjusted all around; especially in regard to the driving-boxes, rod brasses, and other bearings. It must always be remembered in *setting* the Walschaert valve gear that two otherwise separate and distinct motions are now brought into a working combination with each other in order to produce the desired movements of the valve, and these two motions are due to the piston's travel, delivered through the crosshead connection, and the throw, or turning movement, of the eccentric.

The piston's motion really governs the lead by offsetting the valve from its central position far enough

to overcome its steam lap and enough further to give the amount of port opening desired for lead, and it will do this in both front and back positions of the piston, the lead being the same at the beginning of each stroke, both forth and back. The piston must move the valve in a direction *opposite* to its own position in the cylinder to secure lead with outside admission valves, but the piston must draw the valve further in the direction the piston lies in—toward the end of the cylinder—to give the advance for lead with a valve of inside admission; and this principle is made plain by the diagram in Fig. 28, in which it is seen that the piston is connected to one end of a common lever, and the connection to the valve-stem is either at the extreme opposite end, or at an intermediate point on the lever, according to whether the valve is of outside or inside admission. There are three points to a true lever, however, and the third point on the combination lever is its connection with the radius rod—the point where the valve, through the combination lever, receives the greater part of its motion due to the eccentric's action.

In Fig. 28, two combination levers are represented as being actuated by the piston and two radius rods, and are operating two valves,—one with inside admission and the other with outside admission; the latter, and upper, valve has its stem and the radius

rod attached to the combination lever in such a manner that the angle given to the lever by the piston being at the extreme end of the cylinder has moved the valve from an otherwise central position a slight distance in an opposite direction from that occupied by the piston, as is required in order to open the proper admission port for lead.

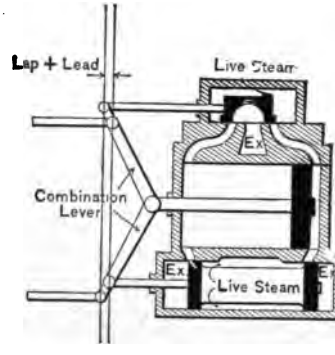

FIG. 28.—Comparative Diagram of Combination Levers Used with Outside Admission and Inside Admission Valves.

To give lead to the valve with inside admission the valve-stem and radius rod are connected to the lower combination lever in an exactly opposite manner to the way in which the same connections are made on the other combination lever just described. The angle of the combination lever in this case pushes the valve in the opposite direction, and the reason for this is plainly

seen by reference to the plate: steam admission past the valve takes place externally with the upper valve and internally with the lower one, yet in each case the steam is admitted to the same end of the cylinder, and this requires that the two kinds of valves be advanced in opposite directions.

The Mason Machine Company undoubtedly were the pioneers in the attempt to introduce the Walschaert valve gear into this country, and if that company was still in the field, their experience would help greatly in the present-day application of the gear. The American Locomotive Company and the Baldwin Locomotive Works are, however, making a specialty of supplying the Walschaert motion to their heavier engines, and the Baldwin Company gives the following instructions for erecting the gear and setting the valves:

1. Check carefully the dimensions of the following parts, rejecting any that are not exactly to drawing:

a Valve

b Valve-stem.

c Valve-stem crosshead, or slide.

d Combination lever.

e Crosshead link.

f Link radius rod.

g Reverse link.

h Location of combination lever on crosshead.

k Length of eccentric crank.

2. Check eccentric throw to see that it is exactly as specified.

3. Be sure that guide-bearer is correctly located from centre of cylinder, as the reverse link is usually attached to it, and variation in the location of the link cannot be allowed. If the link is attached to separate cross-tie, similar precautions must be taken to insure its correct location.

4. Exercise great care in the location of the link, so that the trunnion (fulcrum) centre is exactly to dimensions from the centre of cylinder.

5. See that the reverse shaft centre is correctly located to dimensions given, and that the lifting arm and link are of the exact lengths as specified.

6. Connect crosshead gear to valve, and radius rod to link, *without connecting eccentric rod to link.*

7. Hook up radius rod to exact centre of link, and then revolve driving wheels, seeing that crosshead gear gives correct lead as specified for both front and back admission ports.

(Say that $\frac{1}{32}$ inch is the required lead: with the steam chest open at this time—in the case of a D-slide valve—it should be seen that when the crank pin is at either dead-centre the admission port is open $\frac{1}{32}$ of an inch. With outside admission valves this will be plain, but with piston valves of inside admission a very little steam or compressed air can be used, and by marking the

valve-stem and noting the blow from the cylinder cocks and the point at which the pressure ceases to escape, the amount of lead can be closely approximated. It should be possible, however, to obtain correct results in this phase of the motion with the eccentric rod connected with the link, for it is required that when the reverse lever is at mid-gear the radius rod shall be centred in the link, and the motion of the latter shall have no influence on the valve nor combination lever.)

8. Connect link to return crank by eccentric rod, and obtain full travel front and back, and in both forward and backward motions, correcting any errors by lengthening or shortening the eccentric rod as previously noted.

The valves may now be considered as definitely set, and may be tested to any cut-off points in the usual manner.

A simple additional check should be made as follows: Set one side of the engine so that the piston is at its extreme forward position in the cylinder, and check lead on the admission port.

In this position it should be possible to move the link-block through its entire travel in the link without in any way disturbing the movement of the valve.

This operation should then be reversed and the other side of the engine similarly tried with the piston located at its extreme *backward* position in the cylinder.

If an inspection of the Walschaert gear reveals an error it must not be regarded as a *constitutional* fault that cannot be corrected; go over the motion carefully and it will not be hard to find the cause—a cause that probably can easily be adjusted; for, while it must be realized that as it is impossible to perfectly "square the circle," and is as equally impossible to exactly convert the *circular motion* derived from the driving wheel or its axle into the *straight-line motion* of the valve without error—especially when the results from different points of cut-off are required to be the same in forward gear as with the engine reversed, in back gear—yet the designers have found means by which those inherent irregularities may be practically dissipated and the errors so far reduced that after the natural wear of the working parts has been taken up they cannot be detected, nor will they lessen the economy or power of the locomotive. It must not be inferred, however, that the foregoing statements are made to excuse any inaccuracies that may exist within Walschaert's type of valve gear when turned out of the builder's hands that render it inferior to the Stephenson motion as to the cut-off points, etc.; the Walschaert motion leaves the shop with an indication of truer locomotive valve performance than any other, excepting, perhaps, the Allan gear, which is generally regarded as the most perfect valve motion for loco-

motives in existence, but is not easily adapted to modern American locomotive construction.

In this connection it may be well to say that a great many persons confuse the Allan *valve gear* with the Allen *valve;* the former, as the words imply, refers to Allan's improved mechanism to operate any ordinary locomotive valve, while the Allen valve consists of a common D-slide valve with a supplementary steam admission port cored through it. The Allan gear is not used in this country, but the Allen valve is quite common.

In reviewing the Walschaert principle, or in direct inspection of the gear, keep these points in mind, always: The motion work once set up there is no regularly provided way for any readjustment except by the eccentric rod; when necessary, it may be lengthened or shortened until, with main pin on either dead-centre, the link has assumed its correct position, in which the reverse lever may be moved from the back corner notch to the farthest go-ahead position without shifting the valve, or moving it in the least. But, as lining, or shimming-up, the bearing supports, or carriers, affects the transmission of power, so it may be that parts of the Walschaert gear are not in perfect conjunction, and before the length of the eccentric rod is altered it is well to examine the length of the valve-stem, and it may be of advantage to either plane-off, or line-under, the foot of the link

support, which might correct the rod measurements all the way from eccentric to valve, or else indicate the rod that remains to be changed.

In erecting or designing the Walschaert valve motion for new equipment it is of the utmost importance that it shall be correctly laid out and correctly set up. In individual cases the only accurate way is to have the motion plotted out by an expert, but that is a slow and laborious process, and in shops that make a specialty of supplying this gear a *model*, as a base to work from, is considered a necessity. With a complete understanding of the principle of the Walschaert gear, however, the use of certain formulæ will enable one to design the motion for any class of engine, because one of its greatest recommendations is that the most pronounced changes in locomotive construction need not involve any serious alterations in this valve gear.

Before presenting such formulæ the following suggestions are advisable:

The radius rod should be as long as it can be conveniently placed: at least eight times, or, better still, ten or twelve times the length of the travel of the link-block; and, of course, the radius of the link must be equal to the length of the radius rod.

The shortest length of the eccentric rod should never be less than three and one-half times the throw of the eccentric.

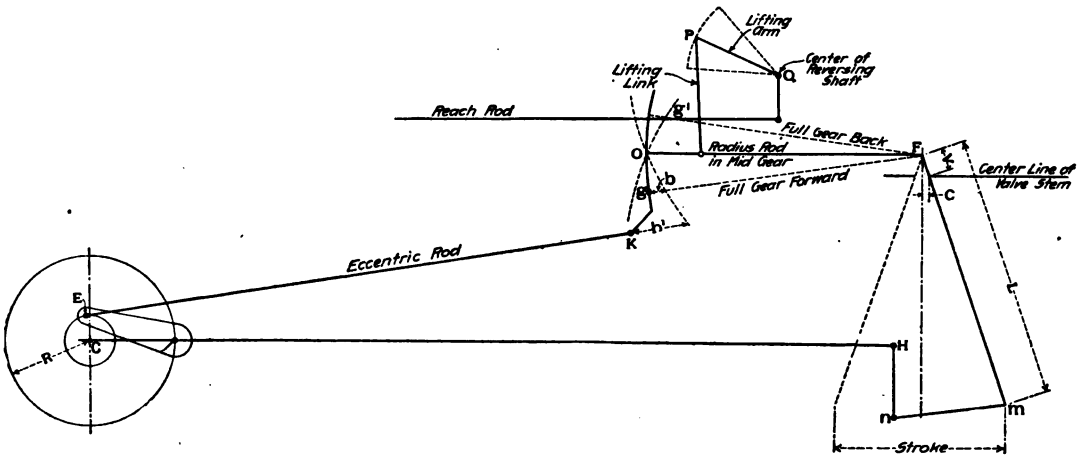

FIG. 29.—Reference Diagram, Walschaert Valve Gear.

R : C = L : V.

R = radius of the main crank.

C = lap and lead (one side).

L = distance between radius rod and crosshead connection (from F to M, Fig. 29) on the combination lever.

V = distance between the radius rod and valve-stem connections.

If it will not shorten the effective throw of the link too much the connection from eccentric rod to link should be brought down as near the centre line of motion of the main rod as can be done; but this is a point for compromise.

The length of the long division of the combination lever should not be less than $2\frac{1}{4}$ times the stroke.

The length of the combination lever must be taken to suit the conditions under consideration in each case, so that the angle through which it oscillates will not exceed 60 degrees, but less is preferable. The required horizontal movement or travel of the connecting point F of the radius rod to the combination lever for a given maximum valve travel must now be ascertained, and is found by the following formula in which R and C are the same as above, namely:

R = radius of main crank.
C = lap and lead.
a = half of the travel of the valve.
b = half the travel of point F.

$$b = \frac{R\sqrt{a^2 - C^2}}{R + C} \text{ for outside admission, and}$$

$$b = \frac{R\sqrt{a^2 - C^2}}{R - C} \text{ for inside admission valve.}$$

These may also be laid out graphically as per Fig. 30 for outside and Fig. 31 for inside admission valve by drawing a circle with S as a centre and a as radius

(shown dotted in the figures). Lay out crank radius R to the left from $S = Sd$ and the lap and the lead dimension $C = Se$ on same side of S for inside admission (Fig. 31), and on opposite side of S for outside admission (Fig. 30). Draw ef and Sh perpendicular to Sd when f becomes the intersecting point between the valve travel circle and the line ef. Draw the line df and where this intersects the line Sh which point we will call h (found by extending df in Fig. 31); Sh

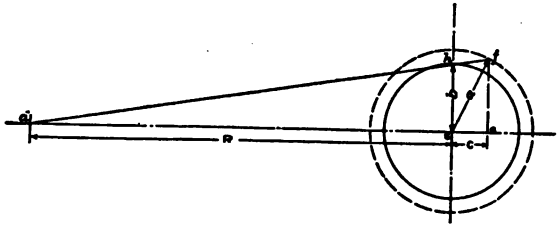

FIG. 30.—Laying-out Diagram, Walschaert Valve Gear.

is then the desired dimension b in the formula, or one-half the required movement of point F, the total of which is represented by the full drawn circle in the figures.

This is a most important function of the gear upon which practically all the others depend and is rather complicated to find by plotting. With a correct suspension of the link-block it will have the same horizontal movement as the point F, and by limiting the angle

of the swing of the link to 45 degrees as a maximum we get the rise or depression of the link-block on either side of the link fulcrum the distance

$$Og = \frac{b^*}{tan.\ d}, \text{ (Fig. 29)}$$

where O is the link fulcrum, d=one-half of the swing of the link in degrees, and b=half the travel of point F in the previous formula.

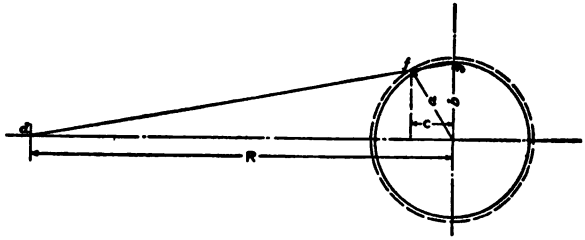

FIG. 31.—Laying-out Diagram, Walschaert Valve Gear.

The vertical location of the link fulcrum O should be, when practicable, on a line drawn through point F parallel with the valve-stem, and the eccentric rod connecting pin K to the link should be as nearly as practicable on the same level as the main axle in order to minimize the effect of the vertical play of the axle on the valve events, but on large engines it may be found necessary to lower fulcrum O and raise connection K to avoid excessive throw of the eccentric crank.

* As no suspension gives a perfectly equal drop of the block in both link positions, this formula is only approximate.

In locating the longitudinal position of the link fulcrum, consideration must be given to the lengths of the eccentric and radius rods so that both may be approximately of the same length. When these lengths fall below three and one-half times the total vertical sweep of the link-block the radius rod should be favored in preference to the eccentric rod. The exact position of the eccentric crank must be plotted as well as the longitudinal location of point *K*. The former must bear such relation to the main crank that it brings the link in its middle position when the main crank is on either side of its dead-centres and the connecting point *K* must be so located that it swings the link in the required angle *d* on either side of the middle position of the link; that is, in other words, the point *K* should be so located on the curve it must follow with fulcrum *O* as a centre that its deviation from the tangent of the eccentric rod to this curve is such that it, as near as practicable, compensates for the irregularities brought about by the angularities of the main and eccentric rods which in ordinary cases brings it from 2 inches to 5 inches in the rear of the tangent to the link drawn through the fulcrum *O*.

The locus of the suspension point of the radius rod lifting bar must also be plotted so that the link-block is at the same point of the link in its extreme positions at all cut-offs. This locus is a curve with its centre

in the vicinity of the point *F* when in its mid-gear position. It would be impracticable, however, to have a lift arm of this length, and a curve of smaller radius must be substituted and so applied that it intersects with the former curve at points giving the least possible distortion to the motion, favoring the position of the link-block in which it is mostly used in service.

The sliding lifter shown in Fig. 11 meets these conditions better than any other method of suspension, but, due to wheel arrangements of various designs of engines, this is not always applicable but must be substituted by swinging lifters, as appear in use with nearly all the designs of valve gear that are illustrated in this book, and which, when properly plotted, give for all practical purposes equally good results.

The vertical height of lower connection *m* of the combination lever in relation to the crosshead connection has a slight influence on the port opening and should, therefore, in the centre position of the lever, be about in the same level as the crosshead connecting point *n* (see Fig. 11).

In Fig. 32 is the motion of the valve graphically represented by the Long diagram at different cut-offs, where the horizontal lines represent the port opening edges in the cylinder face, and the curves of the steam inlet edges of the valve, showing the opening and cut-off points where the latter intersect the former and the

port openings at the various points of the stroke are measured by the height of these curves over and under the opening edges of the ports at both ends of the valve, respectively.

It will be noticed that these ellipses are slightly flattened on one side, which is caused by the slower lineal motion imparted to the valve relative to the angular

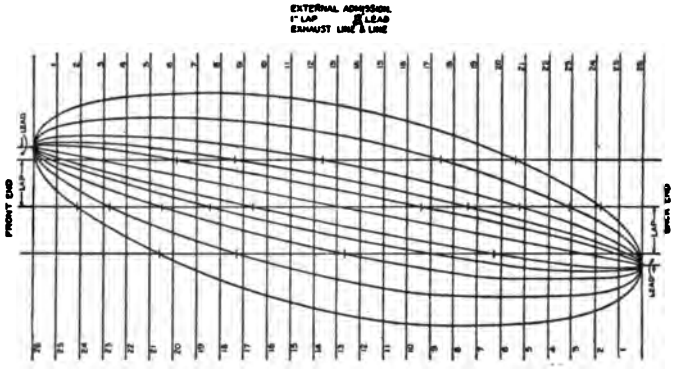

FIG. 32.—Long's Diagram of Valve Events Effected by Walschaerts' Motion.

motion when the eccentric passes its back centre compared with that of the front centre, due to the angularity of the eccentric rod, and is more marked the shorter the rod. Fully symmetrical ellipses are not obtainable, as this would require the eccentric and main rods to be of infinite length; this angularity, however, is of but little detriment to the distribution

of the steam as long as the relation between the length of the eccentric rod and the throw of the eccentric is not less than the given limitations, and is present in all kinds of continuous valve motions derived from uniformly rotating cranks or eccentrics.

GENERAL NOTES FOR ADJUSTING WALSCHAERT GEAR.

1. Ascertain by the following method the position of the eccentric crank: Mark the position of the link relative to its middle position on both of the dead-centres of the main crank. If the position of the link is the same in both cases, the eccentric crank position is correct; if not, the eccentric crank should be shifted until this occurs, or as near so as possible.

2. After the eccentric crank has been correctly set the eccentric rod should be lengthened or shortened as may be required to bring the link in its middle position so that the link-block can be moved from its extreme forward to its extreme backward position without imparting any motion to the valve. It may be noted that the link position may be observed by the usual tram marks on the valve-stem, or direct by marks on the link pin, as may be found most convenient with the link-block in full gear—preferably ahead.

3. The difference between the two positions of the valve on the forward and back centres of the engine is the lap and lead doubled; it is the same in any position of the link-block and cannot be changed by changing the leverage relations of the combination lever.

4. The tram marks of the opening moments at both ends of the valve should be marked on the valve-stem and the latter lengthened or shortened until equal leads at both ends are obtained.

5. Within certain limits this lengthening or shortening may be made on the radius rod if it should prove more convenient, but it is desirable that its length should be so nearly equal to the radius of the link that no apparent change in the lead should occur in moving the link-block as stated in note No. 2.

6. The lead may be increased by reducing the lap, and the cut-off points will then be slightly advanced. Increasing the lap produces the opposite effect on the cut-off and reduces the lead the same amount. With good judgment these quantities may be varied to offset the irregularities inherent in transforming rotary into lineal motions.

7. The valve events are to a great extent dependent on the location of the suspension point of lifter of the rear end of the radius rod, when swinging lifter is used, which requires that this point should be properly laid

out by careful plotting, or, if convenient, it is preferably determined by a model, as irregularities due to incorrect locus of this point cannot be corrected by the other parts of the gear without more or less distortion of same. When this point is so fixed that a change of same is impracticable it may be better, however, to modify other elements if thereby the motion in general can be improved.

HELMHOLTZ MODIFICATION.

Among the various modifications of the Walschaert gear the one made by Helmholtz is probably of some advantage. This modification consists in making the link straight, and the radius rod is connected to the lifting link instead of to the link-block. The curving of the link is compensated for by the reversing shaft, or lifting-arm fulcrum, being located in a given position above the link, so that the locus of the suspension point of the lifting link forms an arc of a circle with its chord perpendicular to the centre line of the radius rod in its centre position. The radius of this arc bears the same relation to the length of the radius rod as the distance of the radius-rod connection above the link-block bears to the length of the lifting link, which results in that this connection is moving in

an arc with a radius of the length of the radius rod, and the same motion of the valve is obtained as in the direct Walschaert gear.

Two advantages may be claimed for this modification, of which one is the straight link being simpler to make than the curved one, and the other is that on large piston-valve engines with inside admission the link fulcrum can be lowered by the amount the radius-rod connection falls over the link-block, whereby the eccentric-rod connection can be brought closer to the centre line of the axle with less length of link and eccentric throw. It has, however, the disadvantage that there is little choice in the location of the reversing shaft, or lifting-arm fulcrum, a proper position for which is hardly obtainable on all types of engines, and admits of no other method of lifting the radius rod in linking-up, or reversing, the engine.

Fig. 33 shows a combination of two diagrams: namely, those of Reauleaux and Zeuner, which coincide exactly as to the different valve events, which may be found as follows:

The distance *AB* represents the travel of the valve as well as the stroke of the engine, though in different scales, which makes no difference when the cut-off is always expressed in fractions or per cent of *AB*. The maximum cut-off is determined upon to be *AR*. Draw a perpendicular line *RC* from *AB* until it cuts

the arc *ACB*. Next decide on a desired lead, and, with that as a radius, draw an arc with *A* as a centre. Draw a line from *C* tangent to the lead circle around *A*, when the lap of the valve is found to be equal to

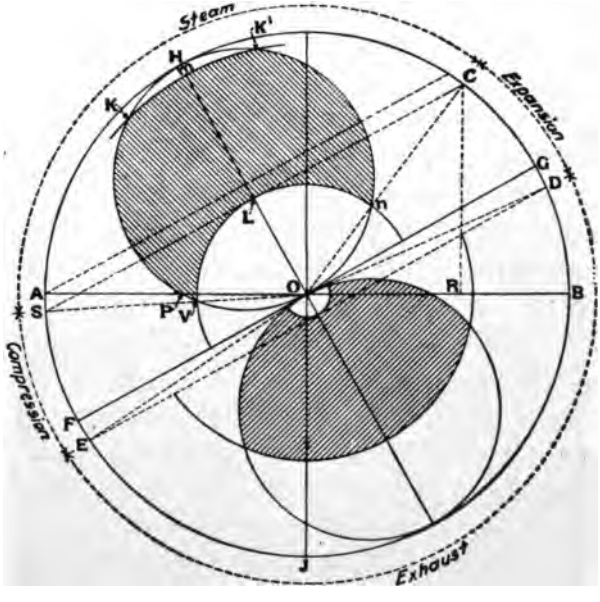

FIG. 33.—Combination of the Reauleaux and Zeuner Diagrams.

the perpendicular distance from the line *CS* to the centre *O* of the diagram. The crank will then be in position *OS* when the valve commences to open, or the angle *AOS* in advance of the dead-centre, and on *OC* at cut-off. Continuing, we find the valve in its

middle position when the crank is on *OG* which is drawn parallel to *SC* through the centre *O*. Extend this line to *F*, and with the exhaust lap as a radius draw the exhaust lap circle on the opposite side of the line *GF* and draw *DE* tangent to this circle, when *OD* is the position of the crank at the release point. From this point the exhaust remains open until the crank reaches the position *OE*, when it closes and compression takes place until it again reaches *OS* for admission and one revolution is completed.

By placing the Zeuner diagram upon this, draw *HJ* perpendicular to *FG*, and with the radius *OH* of the eccentric circle as a diameter, draw the admission valve circle *OVHnO*, and the lap circle with the steam lap as a radius and find the intersection occurs at *V*, both with the circles and the previously laid-down admission line *OS* and the cut-off point at the intersections at *n*. On the line *OH* set off the width of the steam port from *L* toward *H* equal to *Lm*, and with *Om* as radius draw the arc *KmK*. The shaded figure enclosed by the letters VKK^1nL represents the steam port opening during the admission period, and the width of the port opening at any desired position of the crank is found by measuring the distance radially from *O* between the lap and valve circles on the port line, as the case may be, on the desired crank position.

The exhaust openings are determined in the same manner, and are shown on opposite side of *FG*, where the crank passes through the arc *DJE* during the exhaust period with a positive exhaust lap of the size *EF*. When the exhaust edge of the valve is line and

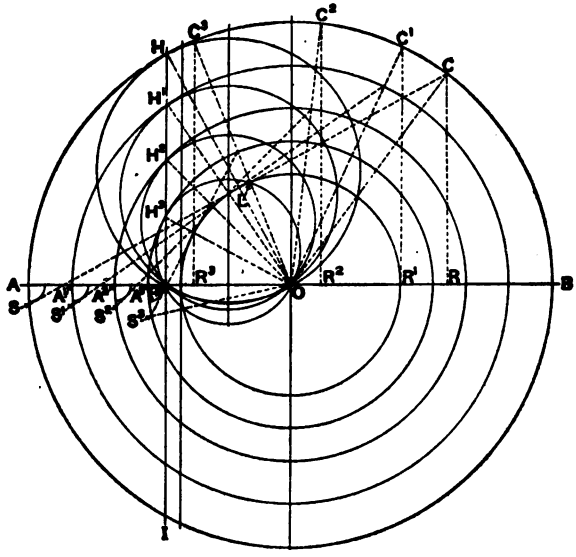

FIG. 34.

line this arc becomes *GJF*, or 180 degrees, and when a negative lap (clearance) occurs, the duration of the exhaust period exceeds the half revolution of the crank. The various events are indicated around the

eccentric circle on the figure as they take place during a complete turn of the crank.

In Fig. 34 the eccentric and admission valve circles are shown at different cut-offs where each set of lines and circles is governed by the same explanation as those of Fig. 33 where the admission points S, S^1, S^2, and S^3 correspond to the closing positions C, C^1, C^2, and C^3, cut-off points R, R^1, R^2, R^3, etc. On OH we have the full-travel valve circle, and OL the lap, or radius, of the lap circle, the latter being the same for all cut-offs as well as the lead, the radii H^1, H^2, H^3, etc., of the eccentric circles, or diameters of the corresponding valve circles, terminate on a line HI drawn perpendicular to AB and at a distance from O equal to that of lap and lead.

When the reverse lever is in its centre position the diameter of the valve circle falls on the line AB, and is equal to lap and lead. Continuing in back position we have the same method repeated, and OI would be the full-travel valve-circle diameter, or the same as the eccentric radius for the valve travel. Any desired cut-off position may be laid out in same manner as that in Fig. 33, which shows all of the valve events for a complete revolution of the axle.

In actual practice the movements are not so regular as the circles indicate, as it is impracticable to obtain the various loci in their theoretical positions; besides,

5"

th
anc
anc
hav
rac
for
etc
sp
pe
to

di
eq
w
th
th
cu
th
cc

as
th

we have the angularities both of the main rods and the eccentric rods to contend with, and whereby irregularities are entering in the problem that must be compensated for, as referred to in the general description. It is not to be considered that a uniform circular motion is the best, but an approximation to it works with less shocks or jerks, and is therefore more desirable for so high-speed an engine as a locomotive. A few advantages can be taken, however, in selecting the suspensions and various connections, so that better results can be obtained than from a true circular motion, which are principally affected by three union points, and are, first, the connecting point of eccentric rod and link; second, the locus of the lifting-link suspension point; and third, the relative height of the crosshead-connection point of the union bar to the corresponding point of the combination lever.

It is not necessary to lay out the valve diagrams except where a given cut-off per cent is wanted. This is the most convenient way to find the required lap.

Fig. 35 and 36, the diagrams on the folding plates, represent the positions of the valve with the main crank at nine different points of the revolution of the driving wheel. In Fig. 35 the valve is of the piston type, with inside admission, and in Fig. 36 an outside admission valve is shown, of the D-slide pattern.

Cardboard models of each of those valves will be found in the pocket on the inside of the front cover, and these models may be placed on the horizontal lines representing the valve seats of the folder plates and a good idea can be obtained of the work done by the Walschaert gear in either of the two methods of applying it, namely, to actuate inside and outside admission valves.

Place one of the cardboard valves on its seat and imagine the main pin to be at any one of the nine numbered points of the first half of the wheel's revolution, turning forward, and then move the valve model until its index points even with the mark at the corresponding number of the scale that shows the different positions of the combination lever; this will be the correct location of the valve at that time, and the relative positions of a point on the piston rod—say the wrist pin—both pins in the union bar that connects the lower end of the combination lever with the crosshead, both ends of the radius rod, the reversing link, its point of connection with the eccentric rod, and the position of the eccentric are all shown by the same numbers.

These diagrams are—with the exception of the reduction in size—reproduced exactly from models used by the Baldwin Locomotive Works, through the courtesy of that company, and are quite interesting,

not only in telling the story of the operation of the Walschaert valve gear, but also in settling to a certain extent any questions as to differences that may be thought to exist in the results obtained in the use of valves of internal admission vs. external admission.

Theoretically, the Walschaert eccentric is placed exactly 90 degrees of the wheel's circle from the main crank-pin, and it has been referred to in this book, in each instance, as so placed; but the diagrams, Figs. 35 and 36, show the eccentric as further and nearer to the main-pin than 90 degrees. This advance or recession of the Walschaert eccentric from a right angle to the main-pin is not for the purpose of securing lead, as it is with the Stephenson motion; if the connection of eccentric rod with the foot of the link was on a horizontal line through the centre of the main axle, then the eccentric would be set at just 90 degrees from the main-pin; and it is endeavored to get the eccentric rod to lie in as nearly a horizontal position as possible when the main-pin is on the upper or lower quarter, but this generally results in so great a length of the lower extension or foot of the link—the distance from link trunnion, or fulcrum, to the pin connecting the link foot and eccentric rod—as to cause an over-shortening of the throw of the link. So, there must be a compromise; the foot of the link is not brought down, usually, as low as theory would place it; its

connection with the eccentric rod is in most cases above a horizontal line through the driving-wheel hub centre, and to overcome the errors introduced by the resultant angular position of the eccentric rod the location of the eccentric in its relation toward the main-pin is changed accordingly. In Fig. 35, representing an inside admission valve, it is seen that the eccentric and main-pin are more than 90 degrees apart, while with the outside admission valve of Fig. 36 the eccentric is less than a quarter turn from the main-pin. The location of the eccentric as it is governed by the point of connection between the eccentric rod and link is exemplified in Fig. 37.

Squaring the centres of axle and link fulcrums, the angle indicates the point of connection from the eccentric rod to link foot with the link in a vertical position and main-pin on a dead-centre; continuing, the third side of the incomplete square furnishes the radius upon which the eccentric shall be placed, and it now depends upon which dead centre the main-pin stands and whether the valve is of inside or outside admission whether the eccentric shall be on one or the other side of the axle; in Fig. 37 the valve is of outside admission and the main-pin is on the back centre, so we place the eccentric on the wheel radius that brings it 45 degrees nearer to the main-pin than 90 degrees from it, because we find that a line from axle centre

to the point of connection of eccentric rod and link foot is 45 degrees above the horizontal line through the hub centre. In other words, the wheel radius on

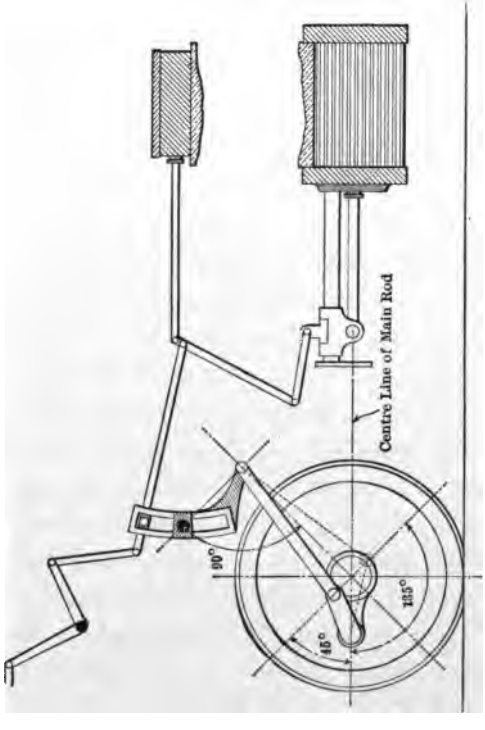

FIG. 37.—Hypothetical Design of Walschaert Gear.

which the eccentric is placed must always be 90 degrees from a line through the hub centre and link-foot pin when the link is in an exactly vertical position—a position in which the reverse lever can be moved

between the farthest go-ahead and back-up notches on the quadrant without displacing the valve, and with the main-pin on a dead-centre.

With outside admission valves the eccentric and main-pin must be 90 degrees apart *minus* the number of degrees represented by the elevation of the link-foot pin above its normal position on the horizontal line through the hub centre. With inside admission valves, raising the link foot above the theoretically normal position places the location of the eccentric 90 degrees *plus* the number of degrees that the link-foot pin is raised, from the main-pin; thus, in Fig. 37 the position is shown in dotted lines in which the eccentric would be placed if the valve was of inside admission and the eccentric should *follow* the main-pin.

Fig. 37 represents an extreme case; but it would be possible to raise the link until the line through the hub centre and link-foot pin was perpendicular to the horizontal line through hub centre; in that case, and with outside admission valves, the eccentric would be 0 degrees from the main-pin: That is, the main-pin and eccentric would be on the same wheel radius. With inside admission valves the eccentric would be 180 degrees from the main-pin, or, just opposite it.

This supposititious case of extreme link elevation most plainly illustrates why irregularities in the valve motion are produced when the link-foot pin is raised

above the centre line of the axle; and the erratic actions so introduced cannot be overcome. When this connection from eccentric rod to link is normally located, the rise and fall of the engine caused by the alternate yielding and exertion of the driving-wheel springs has no material effect on the motion delivered to the valve, but when that point of connection is raised above the normal, the interference to correct action is in proportion to the distance the link-foot pin is placed above the centre line of the axle. And if we imagine a case in which this connection point is raised to a position perpendicular to the axle centre, it is plain that while the engine is running and rolling from side to side over uneven track, for each inch of rise or fall of the link support there will be a full inch in the deflection of the connecting point between the eccentric rod and link extension, and this deflection will be in the direction of motion, causing alternate quickening and halting in the valve's action.

Fig. 37 represents the half-way between the case of extreme link elevation just considered and the technically correct position of the link in which the link-foot pin is on the same level with the centre of the axle; and while the former design would be practically impossible in locomotive practice it would work very well in stationary service. By reference to Fig. 37, and bearing in mind that the distance between the

link fulcrum and axle centre is not invariable but greater or less when the engine is running, it can be understood why the link-foot pin should be as close to its theoretically established location as possible; also, why the eccentric in actual practice is not usually exactly 90 degrees from the main pin.

The folder diagrams, Figs. 35 and 36, show that by being properly designed the Walschaert gear in connection with piston valves of inside admission will produce valve events corresponding closely to those obtained from the use of the D-slide valve and outside admission. It will be noted that the action is practically identical in both cases, the steam admission taking place at the point 7, and the exhaust closure occurring and compression beginning at the point 8, with the main-pin at the same point in its revolution in each case.

THIRD DIVISION

ADVANTAGES OF WALSCHAERT VALVE GEAR

And Arguments for its Use as Against the Stephenson Link Motion

THIRD DIVISION

ADVANTAGES OF WALSCHAERT VALVE GEAR

And Arguments for its Use as against the Stephenson Link Motion

(1) *Accessibility.* There is not room enough for the Stephenson gear under a very large passenger or freight locomotive. The eccentrics are crowded, and proper inspection, not to speak of proper care, is difficult, except over a pit. Valve gear to be properly maintained must be accessible for inspection and lubrication. The accessibility of Walschaert gear should reduce engine failures.

(2) *Weight.* A saving of 1,745 pounds is possible by using the Walschaert gear, in the case of a very heavy passenger engine. The Stephenson gear, weighing as much as two tons, is far too heavy to be satisfactorily reversed twice in every revolution on fast running locomotives.

(3) *Directness.* Walschaert gear transmits the moving force to the valve in very nearly straight lines, avoiding the springing and yielding of the rocker arms, rocker shafts, and transmission bars, which

cannot be avoided in these parts of the Stephenson motion, even if they are made very heavy.

(4) *Permanence of Adjustment.* The advantage of permanence of adjustment lies with the valve gear which has no large eccentrics. This is proved by the statement of the Superintendent of Motive Power of one of the great trunk lines—a comparative statement covering the performances and condition of the valve gear of engines that differ only in having Walschaert vs. Stephenson gears. This statement appears in this book later on. All connections in the Walschaert gear are made with pins and bushings, which are designed specially to resist wear.

(5) *Wear.* Large eccentrics, besides occupying too large space, wear unevenly, and lubrication is difficult with the high surface velocities of the largest sizes. With hardened pins and hardened bushings the Walschaert gear has an important advantage in maintenance.

(6) *Smooth Operation.* Stephenson links, under the influence of two eccentrics, move through wide angles, resulting in a wedging action of the link-block, which strains the gear when working hard, and produces lost motion. Walschaert links oscillate through smaller angles, producing less lost motion. The effect of this angularity of the links is plainly discernible on the testing plant.

(7) *Frame Bracing.* The removal of the valve gear from between the driving wheels facilitates bracing the frames of the locomotive laterally.

(8) *Unvarying Advance of the Valve.* Lead, if present, is not altered by hooking-up the link.

(9) *The General Adoption of Walschaert Gear Throughout Continental Europe.* Its use there for over half a century.

As to accessibility, everything is in favor of the Walschaert motion. The common link motion is crowded in between the frames where it is very hard to get at; the space that it occupies could well be used for other purposes, and the valve gear requires too much attention to be stowed away in a somewhat inaccessible place. When break-downs occur on the road, time is lost in doing repair work, or in disconnecting, in the confined space inside the frame; and in the shop, the locomotive with the Stephenson gear requires considerably more time to have its valve gear set up correctly than does the engine equipped with the Walschaert motion. Imperfectly lubricated machinery is expensive, and the oil used on railroads represents a large sum annually. The double eccentrics require a large amount of oil, but their location invites carelessness in getting it properly applied, and the monthly strictures against the men as to the amount used results in an

over-economy; the effect is that the eccentrics run hot and trains are delayed. I was fireman on an engine when an eccentric strap broke and a hole was punched through the water leg of the firebox, not only disabling our engine, but, through the complexity of train operation, delaying and tying-up other trains until the business of the whole division was disorganized. Oil was hard to get and hard to put on, else the trouble would not have occurred, but it could not have happened if our engine had been equipped with the Walschaert gear.

No matter how conscientious the engineer may be, it is a well-known fact that machinery placed where it can be gotten at is taken better care of, both as regards oiling and inspection, than where it is put in an out-of-the way and crowded place.

It is not uncommon for the valves to get "dry" on account of the lubricator choking, or becoming empty; in such cases the tremendous resistance of the valve under steam pressure throws increased labor upon the eccentrics that would have but very little tendency to over-heat the turned pin of the Walschaert gear; but the location of the Stephenson eccentrics hides from the engineman the first symptoms of trouble, and afterward stands in the way of receiving proper relief.

The amount that the Walschaert gear saves in weight over the common link motion is rather startling, being

in some cases very close to one-half. The motion, from eccentric to valve, on a big, modern passenger engine is continually tearing itself to pieces. Is there any wonder due, when one considers the weight of it all, and that the joint action of two opposing eccentrics are throwing the link and transmission mechanism in one direction to be instantly stopped, started, thrown the opposite way and stopped—only to be re-started and stopped again—and so on with the rapidity engendered by a speed of seventy or more miles an hour? It is a wonder that eccentric straps, rods, bolts, etc., stand the strain at all, and a weight of metal must be there to give strength to the parts that is one of the principal reasons for the adoption of the Walschaert gear on so many newly built engines; the load has been lightened.

"It is understood that the Walschaert gear was applied to the Lake Shore & Michigan Southern Railway locomotives at the suggestion of The American Locomotive Company, to whom belongs the credit for the present tendency toward the introduction of this gear in this country."—*American Engineer and Railroad Journal.*

Now, therefore, as the above-named road has purchased a great many new engines of various types,

and as a number of those engines of each type has been furnished with the Walschaert valve gear while the others have the Stephenson link, it is possible to show the figures regarding the weights, proportionately, of the two gears, on engines that are in all other respects exactly alike.

Following, in parallel column, are presented in detail the weights of the several parts of the valve gears, Stephenson and Walschaert, of the L. S. & M. S.—New York Central, Class D, 2–8–0 freight engines, built by the American Locomotive Company:

	Stephenson. lbs.	Walschaert. lbs.
Crank pins, main	520	490
Crank-pin arms		100
Crosshead arms		60
Eccentric	600	...
Eccentric strap	800	...
Eccentric rods	200	220
Link	280	260
Link support		280
Link lifter	45	...
Reverse shaft and arms	260	400
Rockers	260	...
Rocker boxes	240	...
Transmission bar	300	140
Transmission-bar hanger	80	72
Valve rod	80	70
Vibrating rod		220
Vibrating link		70
Total, pounds	3,665	2,382
Saving in weight, pounds		1,283

One thousand two hundred eighty-three pounds is a tremendous weight to be included unnecessarily in rapid-acting machinery; especially when the deflection of one-thirty-second of an inch may change the motion sufficiently to blind one of the events—lead, for instance. And in substituting the Walschaert gear it means cutting off thirty-five (35) per cent of the weight of the old link motion.

But some of the above are fixed, immovable parts. If we want to find the difference in weight of the *working* parts we should cut out such as the reversing shaft, rocker boxes, link support (Walschaert), etc., and we then find the weight of the Stephenson *motion* gear to be 3,120 pounds, and that of the Walschaert gear 1,702 pounds—a saving in weight of the parts that thrust and take of 1,418 pounds, amounting to the still more interesting figure of over forty-five (45) per cent.

Of the heaviest passenger engines ever built, at this date,—the class shown in Fig. 19—some have Stephenson link, and some the Walschaert gear. The comparative weights of the valve gears of this class, J 2–6–2, are:

	Stephenson. lbs.	Walschaert. lbs.
Crank pins, main	390	365
Crank-pin arms		80
Crosshead arms		50
Eccentric	740	...
Eccentric strap	880	...
Eccentric rods	200	175
Link	260	240
Link support		250
Link lifter	120	...
Reverse shaft and arms	350	375
Rockers	280	325
Rocker boxes	300	300
Transmission bar	270	160
Transmission-bar hanger	120	65
Valve rod	130	100
Vibrating rod		180
Vibrating link		60
Total, pounds	4,040	2,725
Saving in weight, pounds		1,315

or 32½ per cent.

Amount per cent saved in weight of the *motion* parts of gear, nearly 47.

Another type of Classs J 2–6–2 carries the following weights:

	Stephenson. lbs.	Walscharet. lbs.
Crank pins, main	440	415
Crank-pin arms		90
Crosshead arms		50
Eccentric	740	...
Eccentric straps	1,120	...
Eccentric rods	280	200
Link	300	275

	Stephenson. lbs.	Walschaert. lbs.
Link support		260
Link lifter	120	...
Reverse shaft and arms	385	390
Rockers	280	350
Rocker boxes	300	325
Transmission bar	300	170
Transmission-bar hanger	120	75
Transmission-bar bracket	200	...
Valve rod	100	100
Vibrating rod		180
Vibrating link		60
Total, pounds	4,685	2,940
Saving in weight, pounds		1,745

Cutting out the non-moving pieces there is a difference in the weight of the *working parts* of the two gears applied to Class J 2–6–2—of this particular Prairie type of engine—of 1,835 pounds, equalling a saving by the use of the Walschaert valve gear of *Forty-eight plus per cent* (48 + %). The *motion part* of the latter gear, then, is but little more than one-half as heavy as the corresponding part of the common link motion used on other engines of the same class.

The energy consumed in keeping going all of the *superficial* weight of the Stephenson valve gear on our modern locomotives might just as well be expended in carrying several more tons of train load. Its reciprocating motion at high speeds is destructive. On engines of large size the eccentrics are of such weight,

on account of their increased size made necessary by the extraordinary diameter of the axles, that in spite of an expensive amount of lubrication a braking power is exerted, and *they will run hot.* These weights of the valve gear make engines hard to reverse or hook up, and there is a certain lack of economy when, in spite of careful counterbalancing of the shifting parts of the valve gear, any engine "handles" hard.

Freight engines run as fast as passenger engines do. By that is meant that a freight engine has smaller wheels, and to make the running time required of the freight trains of to-day the smaller wheels of their engines must make about as many revolutions per minute as do the bigger wheels of the passenger engines to make their time; and for this rapid action of the machinery the lesser weight of the Walschaert gear makes that type of valve motion most desirable. And no change in locomotive design will call for any increase in the number of reciprocating parts of the Walschaert gear, thus saving the weights, and errors in the motion due to vibration and lost travel that are present in common with "transmission bars," etc.

This latter point is covered in the matter of *directness.* There are but few motion parts to the Walschaert gear, and they are of the same number for all engines in all classes of service, except that sometimes the connection from combination lever to valve-stem, or

from eccentric rod to link, has to be carried over by a sort of rocker-arm arrangement on account of the steam chest being rather far inside from the centre line of the cylinder.

A motive-power official will inform us that an engine with the common link motion has a certain amount of lead, in full gear, but he knows that that matter of lead is decidedly uncertain—a variable quantity—considering the interference of the numerous joints in the gear from eccentric to valve, the slackness from wear of the two eccentrics and their encircling *straps*, of the many pins and rockers and the vibration of the transmission bar. And this lost motion is further acted upon by the practice on many roads of using piston valves of inside admission with closed "spools," instead of having the valves open from end to end; at the instant of *steam release* from the cylinder the exhaust pressure acts directly against but one end of the double piston, and with a power approximating the steam pressure that is admitted to the low-pressure cylinder of a compound engine, forcibly closing in all slackness of the motion from the valve clear back to the eccentric.

In regard to permanence of adjustment, and the effects of wear, the results obtained from the L. S. & M. S. engine proves the superiority of the Walschaert valve gear; the following statement is from the Super-

intendent of Motive Power of that road, Mr. H. F. Ball:

"In reference to the Walschaert valve gear, engine No. 912 has now a total of $\frac{1}{16}$ inch lost motion in the valves. This is the total lost motion in the whole motion work; the engine has made, approximately, 39,000 miles. Engine No. 5924 (with link motion), examined the same date, had $\frac{5}{16}$ inch lost motion in the valve-stem, and has made, approximately, 32,000 miles. This seems to be very much in favor of the Walschaert valve motion."

As to smoothness of operation, it is only necessary to understand the construction of the Walschaert gear and to compare it with the double eccentric motion, or to watch it in action, to realize its niceness of operation.

Removing the valve gear from between the frames permits a cleared inside space for other uses that has always been wished for. One of the common causes of engine failures in recent years has been weak engine frames, very often resulting in their breaking. At the very point where strong cross-bracing is necessary—between the cylinder casting and main driving-axle—there has been no room for it, the space having been taken up by the eccentric and link mechanism. With the Walschaert gear, as much heavy frame bracing as is desired may be put in—or anything else. There

are engines like that of the Erie motor car, previously illustrated, where much inside space is needed for the spring arrangement and main car-body bearing.

Some very heavy Atlantic type passenger engines with the Stephenson link motion were received by a certain road, and trouble that was experienced at the start from hot driving-boxes never ceased. The underneath construction of these engines compelled placing the links in such a position that the eccentrics, to be in line, were crowded outward, making necessary the use of a too narrow driving-box, and a brass of insufficient bearing surface for the great weight that it had to support. The next delivery of engines to that road were of the same class except that they had the Walschaert valve gear, and wider driving-boxes that had bearing surfaces proportionate to the weight of the engine, and these engines ran cool from the first trip. Nothing about the engine needs to be sacrificed to make room for the Walschaert valve gear.

The improved design of the De Glehn Balanced Compound has been adopted by the American Locomotive Company, and the Baldwin Locomotive Works, in their *Cole*, and *Vauclain*, balanced compound engines, respectively, and in each of which a *crank-axle* is a principle feature. The manufacture of this type of engine is increasing in America since European practice has shown us the absence of danger from that

bugaboo—the crank-axle. Instead of crowding four eccentrics and the rest of the valve motion—with its heavy interference with perfect balance—among the gear of the inside engines, it can be replaced, as with the De Glehn engine, with the lighter, more accurate, Walschaert gear on the outside of the frame and wheels.

The possibilities that lie in the use of this valve gear are not generally realized in this country; it can be applied to engines of any type without material alteration, and without the use of transmission mechanism. The line of motion is nearly straight, and the longer the eccentric rod and radius rod—the greater their radius—the more perfect will be their work. Europeans know these things; they seem to believe, also, that the desired results from the use of this valve motion are best secured in connection with the outside admission, D-slide valve. On the main lines of Continental Europe 90 per cent of the engines are equipped with the Walschaert gear, and the remaining 10 per cent represents but a fraction of Stephenson link motion. At the Liège Exposition, out of 31 engines on exhibition, 25 were fitted with the Walschaert valve gear.

Its adaptability is great. If it is desirable, in order to simplify the reversing mechanism on any particular type of engine, to *raise* the radius rod and link-block

when the reverse lever is thrown forward, it will only be necessary to change the position of the eccentric 180 degrees—from a quarter ahead of the main-pin, with outside admission valves, to a quarter behind the pin.

And now, as one of the chief peculiarities of the Walschaert gear lies in the manner in which lead is secured, and maintained unchanged throughout the different points of cut-off, *the general effects of lead* are worthy of speculation. Self-opinioned men, men who think for themselves and are not too over-conservative, are beginning to question if the advance of the valve, any further than is necessary to overcome the steam lap, is really a help or a hindrance. If not a help, can it fail to be a hindrance? There doesn't seem to be any reason why, with any class of engine in any branch of service, the amount of lead opening in full gear should *increase* as the speed increases, as does occur when the engine with the Stephenson link motion is hooked up. With the Walschaert gear the amount of lead suitable to the speed at which a particular engine will be expected to run or the work it will be required to do can be decided upon and the valve advanced to permit that opening, and that lead remains positive, unaffected by hooking-up, and almost entirely free from the shifting of results due to lost motion and vibration.

An expert on valve motion has the following to say in regard to this question; it is an extract from an article in one of our leading technical journals:

"Opinion has grown, as error is apt to grow, that an admission of steam is absolutely necessary to create a cushion upon which the piston and connections may gradually come to rest before beginning the return stroke. Those who are accustomed with the running of locomotives know that when the throttle valve is closed the rods and reciprocating parts run smoothly, even if loose. No pounding is observable at any rate of speed.

"Is it not reasonable to expect that the piston meeting with steam resistance before it has completed its stroke should rudely affect the bearings of the rods and crank-pins, and induce an excess of friction? It has been repeatedly shown that if the pre-admission of steam amounts to a sufficient quantity to cause compression, a marked increase in steam consumption is shown.

"The real need is the readiness of admission of steam at the time when it is required to move the piston in the other direction, and while the ordinary valve has this advantage in a marked degree, this rapidity of opening compensates in some degree for its other defects.

"Assuming, however, that lead is desirable for slightly cushioning the piston while the working parts of the

engine are being subjected to intense friction, is it not reasonable to assume that the same amount would be sufficient for different rates of speed? Upon what hypothesis can it be assumed that one-thirty-second of an inch is sufficient opening at a moderate rate of speed and that three-eighths of an inch is necessary at a higher speed?"

Exactly; and if a small amount of lead is demanded by those who think it necessary at certain times, the use of the Walschaert gear will prevent that amount from increasing as the speed increases and the reverse lever is hooked up.

One night the writer was firing a little 4-4-0, 17-inch by 24-inch engine pulling a very heavy passenger train, when we broke down and had to disconnect the engine on one side. After fixing things up in good shape we proceeded; there was only one more stop to be made short of our journey's end, but in spite of the efforts of the engineer, we came to a standstill at that station with the working engine on an exact dead centre.

It was decided to unlock the Janney coupler behind the tender, leaving the safety chains coupled, and "pinch" the engine ahead and off the dead centre, and with the Janney set to couple, to pull the train a few feet by the safety chains and allow the coupling to "make"—trusting to luck to stop again with the

crank-pin off the centre, in order to re-couple the air hose.

The trainmen took turns operating the pinch-bar, but their efforts were in vain. I noticed, however, that just before their groans began to indicate the application of cause toward hoped-for effect, the engineer had opened the throttle-valve pretty strong. The engine would not move, however, and the engineer finally shut off steam, jumped down from the engine and took the bar: "Now, Billy! Give 'er steam—here she goes!" he promised; but she wouldn't move; he kept on trying, with no better results, so I shut off steam and opened the cylinder cocks.

The conductor had about decided to send for the section men, when the engineer concluded to try the pinch-bar again, and calling to me to open the throttle, he threw himself at it once more: "Lay on, Macduff!" thought I, with a sudden idea, and I did not open the throttle valve this time; the result was that the engine responded to the pinch-bar as promptly, and was kept moving with as much ease as if it were an empty flatcar.

That night, then and there, I lost all of my confidence in the theory of *lead*. It was proven that lead not only fails to be of any assistance in carrying an engine past the dead centre but *offers resistance* to the crank-pin's movement past the dead point. The force that lead

causes to be exerted when the engine is on a dead centre absorbs, or nullifies, much of the energy furnished by the other source of power at its zenith—the *engine* on the other side, with its admission port wide open and the relation of crank-pin to driving-axle giving the maximum leverage.

If the pre-admission of steam to the cylinder, that is referred to as lead, is finally conceded as necessary only for cushioning the piston at the completion of its stroke, any argument for it is now clearly fallacious, for the reason that the exhaust may be cut off at any point toward the finish of the piston's stroke and the resultant compression will produce the cushioning effect just as well—and more economically,—as evidenced by the quoted authority, than by means of any pre-normal opening of the admission port.

Motive-power officials often try to induce engineers to run their engines with full open throttle and reverse lever hooked up to the limit, claiming that an engine would run faster and work more economically that way. That method has been tried, fairly, and also the other one of using a lighter throttle and a little longer travel of the valves, and invariably the latter way gave the best results, both in speed and fuel economy. It is not imagination, and might be attributed to the fact that the lower down the link is worked the less the lead, with the Stephenson motion, and the

less "friction on the bearings of the rods and crank-pins" there will be. Of course, it may be said in answer, that there is but a slight increase in the amount of lead from the point where the engineer worked the lever up to the point at which the master mechanic wanted it worked; yet *there was a difference*, and an otherwise unexplained variance in the performances of the engine—favorable to the position of the reverse lever in which it is claimed by some that the steam is "wire-drawn."

The simplest test to prove the superiority of the Walschaert valve gear, and the easiest to make, yet most convincing to the practical mind, is, where there are engines of the same general type except that some are equipped with the Stephenson link and others have the Walschaert gear, to note the boiler pressure required to move each of these engines from its stall in the roundhouse, with its cylinders "cold." The test with big "battleship" engines has shown that eighty-five pounds on the steam gauge were required to get the engine with the old link motion on the turn-table, while the engine having the Walschaert valve gear was moved out, easily, with the gauge showing thirty-five pounds of steam.

FOURTH DIVISION

QUESTIONS AND ANSWERS

Relating to the Walschaert Valve Gear

Walschaert gear and the Stephenson link motion so generally used, until recently, in America?

A.—The difference is in the manner in which the initial source of motion from the turning of the driving-wheels is secured, in the way the gear is reversed to change the direction in which the engine shall run, and the method of securing *lead.*

Q. 5.—Do not both the Stephenson and Walschaert gears secure their initial motion through eccentrics actuated by the turning of the main pair of driving-wheels?

A.—Yes; the Stephenson link is given its motion by two eccentrics keyed upon the main-axle, one of which is thrown into gear to so actuate the valve that the engine will run forward, while throwing the other eccentric into gear will cause the engine to run backward. In the Walschaert motion the link receives the main, or initial, valve-actuating power through a single eccentric, not on the axle but in the form of a "return crank" fixed upon the main crank-pin, and this eccentric is in full gear and works the link at its full throw always, and with the engine running in either direction.

Q. 6.—How is the Walschaert motion reversed?

A.—The position of the *radius rod* that directly actuates the valve-stem is shifted from one to the other end of the link to cause reversion; the radius rod is

raised or lowered for this purpose by the regular reversing gear, the link being suspended from a bracket by a fulcrum pin, or trunnion, at its exact centre.

Q. 7.—What is the position of the valve in relation to the piston?

A.—*Theoretically*, the valve is always one-fourth of a complete stroke, or cycle of motion, ahead of the piston, when the engine is running in either direction.

Q. 8.—What is meant by *Lead?*

A.—If the valve *was* exactly one-fourth of a cycle of motion in advance of the piston, the eccentric that actuates it would necessarily be placed at a point on the axle just 90 degrees ahead of the main crank-pin in respect to the direction in which that eccentric should cause the engine to run, but, if so placed, when the piston was at the beginning of its stroke—at one end of the cylinder—the valve would be exactly centred on its seat, with both ports, or steam passages, to the cylinder covered and closed. In actual practice the valve is advanced slightly, but far enough, in the direction of its required travel, to open, by a very short distance, the admission port at the piston end of the cylinder; this gives a pre-admission of steam against the piston *just before its stroke has been completed*, and has the double effect of cushioning the piston and hastening the full opening of the steam

admission port. This preliminary port opening to the cylinder is termed the Lead.

Q. 9.—What further effects are produced in advancing the valve to create the lead opening, that cannot be regarded as beneficial?

A.—The advance of the valve causes an earlier closing of the exhaust of the used steam from the cylinder, thereby creating higher compression ahead of the piston—between the piston and the cylinder head toward which it is travelling; the cut-off of *live* steam that is being admitted to the cylinder occurs sooner during the piston's stroke, and this detracts from the turning power of the main crank when the engine is working in full gear with a heavy load; and, as giving lead hastens all of the valve events, the steam that is driving the piston is retained in the cylinder during a shorter part of its stroke, and this earlier steam release is a loss of a certain per cent of the steam's expansive force.

Q. 10.—After the cut-off of the exhaust has occurred, will not the compression between the piston and cylinder head provide the cushioning effect that may be necessary as the working parts approach the reversing point in their motion?

A.—Yes, the very slight amount of compressible resistance that is deemed necessary may be so obtained, by a suitable design of valve motion.

Q. 11.—How is the advance of the valve to create lead opening secured with the Stephenson link motion?

A.—By advancing both the "go-ahead" and the "back-up" eccentrics in the proper directions, on the axle.

Q. 12.—How is lead obtained with the Walschaert gear?

A.—In the Walschaert valve gear lead is obtained from the straight-line motion of the *piston*, instead of from the circular motion of the *axle* with its errors incidental to the angularity of the conveying rods. Walschaert's vertical *combination lever* has its lower end connected to the crosshead and the upper end to the valve-stem where an outside admission valve is used; intermediately, the radius-rod connection with the combination lever forms its fulcrum, and the motion derived from the crosshead so modifies the motion imparted by the single eccentric, through the radius rod, as to produce the required lead in either forward or back gear. With the use of inside admission valves the points of connection of the radius rod and valve-stem to the combination lever are reversed, the radius rod being connected to the extreme upper end of the lever and the valve-stem connected intermediately.

Q. 13.—Does the lead, as derived by the Stephenson method, remain constant?

A.—No; each eccentric is separately adjusted, or advanced, to give the decided amount of lead *when in full gear*, but as the link is hooked up the lead automatically increases.

Q. 14.—Is this increase of lead to be desired?

A.—It is not, in any class of service.

Q. 15.—Does the lead vary with the Walschaert gear?

A.—No; with the Walschaert method lead, if present, remains unvaryingly the same at all points of the cut-off.

Q. 16.—Is the position of the valve advanced for any other purpose than that of securing lead?

A.—Yes. The steam edges of the valve are widened beyond the outside edges of the admission ports, and the first advance of the valve is for the purpose of overcoming the delay of port opening in consequence of this overlap. The distance the edges of the valve extend beyond the port openings is termed the *lap*, and the valve must be moved far enough to overcome the lap before the opening for lead can begin.

Q. 17.—Is the further advance of the valve to secure lead necessary?

A.—Whether lead is a necessity or not is a matter of argument, but it is being conceded by many expert men that lead, as a port opening, is not necessary, and by some it is considered a detriment.

Q. 18.—Explain the manner in which lead is derived through the action of the Walschaert combination lever.

A.—The Walschaert eccentric is set exactly 90 degrees, in effect, from the main crank-pin, and if the combination lever were not present the valve would always be a "quarter" from the piston, and would be centred on the seat with both admission ports covered when the piston was at either end of the cylinder. Now we introduce the combination lever: The connection of radius rod near, or at, the upper end of the combination lever represents its fulcrum; the lower end of the lever is connected with the crosshead which is now at one end of its travel in the guides. Now, if the valve-stem is connected to the combination lever *above* the fulcrum (radius-rod connection) it is plain that the angle of the short (upper) end of the combination lever will throw the valve, slightly, in a direction *opposite* to the position of the piston in the cylinder, and this is the correct movement to be given the valve with outside admission to secure the port opening for lead. If, however, the valve-stem is connected to the combination lever *below* the fulcrum, or radius-rod pin, the valve will be *drawn in the direction of the piston's position* in the cylinder by the angle of the short end of the combination lever, and this is the proper direction for the valve of inside admission to

be advanced in order to permit the pre-admission of steam against the piston, called *lead.*

Q. 19.—Suppose that an engine should be designed to use the Walschaert valve gear, and lead was not desired: That is, with the crank-pin on a dead centre and piston at an end of its stroke the admission port would not be open any,—steam edges of the valve and port line-and-line—are we to infer that the combination lever would not be necessary—that it could be dispensed with?

A.—Not at all. The combination lever must be included in the Walschaert gear on any engine and with any style of valve. As explained, an advance of the valve is necessary to move it the distance of the lap, so that the steam edge of the valve and the outside edge of the admission port will be line-and-line when the piston is at the start of its stroke and lead not required. The amount of advance of the valve derived from the action of the combination lever is equal to *the distance of lap, or lap plus lead,* according as the design of the engine calls for.

Q. 20.—Is there not a great deal of confusion as to the actual meaning of lead?

A.—Yes. The angular advance of the Stephenson eccentric upon the axle and the angular inclination of the Walschaert combination lever are often referred to as the lead, because it is known that they cause an

advanced motion of the valve, when, as just shown, an advance of the valve is highly necessary even although it gives no actual *lead.*

Q. 21.—Assuming an engine to be running forward, is the Walschaert eccentric placed a quarter ahead, or a quarter behind, the main crank-pin?

A.—This is a variable matter, depending upon the construction of the reversing gear; if, with the reverse lever in the forward gear the radius rod is worked by the lower end of the link, with outside admission valves the eccentric is placed a quarter ahead of the main-pin and with valves of inside admission the eccentric is just opposite, or a quarter behind the main crank-pin.

Q. 22.—Is the Walschaert valve gear of the type referred to as of "direct motion"?

A.—The Walschaert motion is either direct or indirect, according as to which direction the engine is running. When the radius rod is working below the centre, or fulcrum, of the link there is a single direction of motion from the eccentric to the valve and the motion is direct; but with the radius rod working above the centre of the link, the motion is indirect, for the reason that the link then acts as a double rocker-arm, and when the eccentric throws the lower end of the link in one direction the upper end of the link moves the valve the opposite way.

Q. 23.—Reversing the engine, then, changes the

motion from direct to indirect, and *vice versa*, does it not?

A.—Yes.

Q. 24.—The answers to Questions 13 and others, refer to shorter cut-off and "hooking-up" the link: What is meant by those terms?

A.—Together, those terms represent cause and effect; hooking-up is the cause and shorter cut-off is the effect. Referring to the Walschaert gear, when the radius rod is working in either extreme end of the link, it is giving the valve its longest travel and steam is being admitted to the cylinder with the maximum limit of port opening; *hooking-up* really means drawing the reverse lever from a full-gear, corner notch of its quadrant to a notch farther up, nearer the centre, and this hooking-up of the reverse lever draws the radius rod to a point nearer the centre of the link, with the result that the motion of the radius rod is reduced and it, in turn, by its shortened travel shortens the whole travel of the valve; the effect of this is that the admission port is closed earlier during the stroke of the piston, and the expansive force of the steam is utilized to drive the piston during the remainder of the stroke. The closing of the admission port is referred to as the *cut-off*, and therefore this earlier closing of the port is termed *shorter cut-off*.

Q. 25.—When the reverse lever has been hooked up

to the centre notch of its quadrant how much travel will the radius rod give to the valve?

A.—None. When the reverse lever is in the centre notch the link-block (to which the radius rod is attached) is exactly centred in the link—its pin centred exactly with the fulcrum pin of the link—and the link can impart no motion to the radius rod. The valve will have a short motion at this time, however, the motion produced by the combination lever, and its full travel with the reverse lever on the centre will be just twice the distance of lap plus lead.

Q. 26.—With the reverse lever in forward gear the radius rod is carried at the lower end of the link, and in back gear at the upper end of the link, is it not?

A.—Yes, this is American practice, but it can be arranged otherwise, if more convenient, and will make unnecessary the multiplicity of levers in the reversing gear that is sometimes seen where the above arrangement is adhered to. The radius rod may be carried in the upper end of the link to make the engine run forward and at the lower end to run backward, and in such case it is only necessary, for further change, to move the position of the eccentric 180 degrees—from a quarter ahead to a quarter behind the main pin, or *vice versa.*

Q. 27.—Is it easier to secure equal cut-off at both

ends of the cylinder with the Walschaert gear than with the Stephenson link motion?

A.—Yes. The Walschaert motion is more simple and direct, and through the regular action of the link and combination lever the cut-off is maintained equal at both ends of the cylinder, in either gear and with the reverse lever hooked up to any notch in the quadrant.

Q. 28.—Why is the Walschaert link curved in an opposite way to the curve of the Stephenson link, and what is the radius of the curve of the link?

A.—The radius of curve of the Walschaert link is equal to the length of the radius rod, and the reason for this and the reason for the link curving in the direction it does, is, that as the radius rod is raised or lowered to shorten or lengthen the cut-off, the valve will not be erroneously affected. The theory of this is nicely exemplified by setting the engine on either dead centre, when the reverse lever may be moved from one corner notch to the other extreme end of the quadrant without changing the position of the valve, the link-block having the same curve to its path as the curve of the link.

Q. 29.—Is it possible to make any changes in the adjustment of the Walschaert gear on the road, or any such roundhouse experiments as are often made with the common link motion?

A.—It is not; sometimes, however, a slight irregular-

ity in the motion may be corrected by lengthening or shortening the eccentric rod, only, but even this is usually a "back shop" job.

Q. 30.—Is it not possible for the length of the eccentric rod to become slightly changed?

A.—Only as it may through a change in the adjustment of the bearings at the back-end connection to the eccentric crank; such change may have been made intentionally, or may be due to service conditions.

Q. 31.—Can any other part of the Walschaert gear, except the eccentric rod, be changed or adjusted, outside of the machine shop?

A.—No. Neither is it ever necessary, and as the lost motion from wear is hardly perceptible after many months of service an engine may be run for a longer time between shopping.

Q. 32.—Does any part of the Walschaert gear have a tendency toward heating?

A.—The Walschaert valve gear is peculiarly free from any inclination to heat, except that occasionally the gear is not properly designed to meet unusual conditions of track and service, and eccentric rod pins will heat from the twisting effect between the driving wheels and engine frame. This, however, is not a constitutional disorder, and may be cured, or prevented.

Q. 33.—In order to insure correct action of the

Walschaert valve gear what parts of the engine outside of the valve gear should be kept up in good condition, and as free as possible from lost motion?

A.—No form of valve motion will show good results if the other working parts in general of the engine are not kept up, but in particular, the driving-boxes should not sustain lost motion.

Q. 34.—Is it a fact that lost motion in the driving-boxes induces greater error in the motion of the valve with the Walschaert gear than with the Stephenson link motion?

A.—Such is *not* the fact, whatever; although the Walschaert eccentric is a greater distance from the centre of the driving-box, usually, than the eccentrics on the axle are, and any lost motion between the driving-box and engine frame will have a slightly greater effect *at the Walschaert eccentric pin* than it would have at the link-motion eccentrics on the axle; yet, with the Stephenson eccentrics the full amount of this lost motion is delivered to the valve with the link working in full gear, while in the Walschaert motion the amount of the variation is greatly decreased through the long leverage of the link foot.

Q. 35.—Does the up-and-down motion of the engine on its springs affect the steam distribution of the Stephenson link motion?

A.—Yes, to a very noticeable extent.

Q. 36.—Does this motion of the engine have an equal disturbing effect on the valve's motion with the Walschaert gear?

A.—No, it has no effect, unless the connection of eccentric rod to link foot is placed at too high a point above the centre line of the axle.

Q. 37.—When the crosshead is at the exact centre of its travel, main-pin on the upper or lower working quarter, reverse lever in centre notch, and the combination lever in a plumb vertical position, at what point in its travel should the valve be standing?

A.—The valve at this time should be perfectly central on its seat, with both admission ports covered.

Q. 38.—What is meant by the above expression of the main-pin being on the "working quarter"?

A.—When the main-pin is on the *actual* quarter—either the upper or lower—it is on a perpendicular line through the centre of the axle, but the piston will not be in the exact centre of the cylinder, owing to the angularity of the main rod. On the other hand, if the piston *is* at the true centre of the cylinder—as was supposed in the foregoing question—the main-pin will be a slight distance away from the perpendicular line through the centre of the wheel, or axle, but it is now on the *working* quarter because, technically, it has half completed a single stroke; if the back end of the main rod should now be disconnected from the

main-pin and dropped, or raised, as the case demands, until it was on a horizontal line, the opening for the main-pin in the stub-end of the main rod would centre, exactly, over the centre of the wheel hub, proving that it was half-way in its stroke. The longer the main rod the less its angularity and the lesser will be the difference between the actual and the working quarter-positions of the main-pin.

Q. 39.—The engine standing with piston at the true centre of the cylinder on one side and the reverse lever in the middle notch of the quadrant, suppose that the valve was *not* exactly centred—opening the throttle would cause steam to blow from one of the cylinder cocks on that side of the engine: What could be the cause, and how remedy it?

A.—First, be sure that the reverse lever *is* in the middle notch; a mistake may have been made in laying out the notches of the quadrant, or in setting it up; when the link-block pin and the link-fulcrum pin are centred together the reverse lever is in the proper middle notch, and when they are so situated and the valve is not covering the admission ports completely with piston in exact centre of the cylinder, undoubtedly the link bearer, which is attached, commonly, to the guides, varies a little in its position, either fore or aft, and should be moved enough to correct the error; or the valve-stem can be lengthened or shortened, but as

this induces other minor errors the other method would be preferable.

Q. 40.—Would not moving the position of the fulcrum that carries the link produce other error in shifting the distance between it and the eccentric?

A.—Re-setting the link fulcrum might correct the whole motion, if it had been set up untrue; but if correcting the position of the link fulcrum should cause the error suggested, that, again, can be corrected by adjusting the length of the eccentric rod. Here is a fundamental point to remember: The gear from the link forward, inclusive, is permanently set up, all motion bearers being in rigid attachment to the guides. Back of the link, however, there may be changes in distances due to wear and consequent lost motion, and for that reason the eccentric rod, alone, may be lengthened or shortened as may be found necessary.

Q. 41.—On the big, modern engines that are being equipped with the Walschaert valve gear there does not seem to be any convenient way of changing the length of the eccentric rod except in the adjustment of the bearings at its back end; how, then, could the length be altered as advised?

A.—Outside of the method just referred to, as stated before, it is a "back shop" job to alter the length of the eccentric rod, and there is where it should be done. The earlier built engines, with much lighter rods, and

foreign locomotives of the present date, had, and have, adjustable eccentric rods. In Fig. 10, Wm. Mason's improved design of the Walschaert gear, the eccentric rod is shown to have adjusting nuts near the connection to the link foot.

Q. 42.—Then, if the eccentric rod is the only part of the Walschaert valve gear that *can* be changed outside of the machine shop and the only part that *should* be altered at any time in the shop, this motion is not likely to be tampered with, nor to get "out of square"?

A.—That is right. The Walschaert valve gear will not wear away in its bearing parts enough to make it necessary to have adjusting devices.

Q. 43.—Explain when it will be necessary to correct the length of the eccentric rod.

A.—Set the engine with the main crank-pin on the forward dead centre on one side, and have the reverse lever moved from the go-ahead corner notch up toward the centre of the quadrant; while the link-block is rising, if the valve-stem is pushed forward slightly the eccentric rod should be lengthened; but if the valve-stem should be drawn backward by the rise of the link-block the eccentric rod needs to be shortened. In either case make but slight changes in the length of the rod, and keep on testing until hooking up the lever to the centre has no effect on the valve-stem nor

radius rod. Then test, and alter if necessary, the other side in the same way, but with the main pin on the *back* dead centre.

Q. 44.—The numerous engravings of locomotives equipped with the Walschaert valve gear show that the link bracket is invariably attached to the guide-bearer, or yoke, and the slide for the valve-stem is mounted on the upper guide-bar: Does this just happen so, and as a matter of convenience, or is there a reason why the main supports of the Walschaert gear should always be so contained?

A.—It is very important that the trunnion upon which the link oscillates should be fixed at an unvarying distance from the cylinder, and for assurance that the distance will be permanently maintained, the link bracket should be rigidly fastened to the guides; and as the valve-stem slide supports the combination lever and front end of the radius rod, it represents a point where no variation in the motion is permissible, and it, too, is secured fixedly to the guides.

A type of heavy-freight engine has recently been built on which it would have been inconvenient to hang the link as recommended, and a large, hollow, cast-steel bracket was laid across, joining the bars of the engine frame on both sides just back of the guide-yoke, to act both as a frame binder and brace and a carrier for the link bracket. With one class of this

general type the big shell casting is bolted to the guide yoke as well as the frame, and becomes a most substantial engine frame and valve-gear stiffener, but with another class of engines the casting referred to is separate from the guides yet carries the link, and as the American bar-frame is not altogether unyielding, this big, powerful freight engine will in time, no doubt, develop certain irregularities in the valve's action that may be attributed by some to the fact that the engine is equipped with the Walschaert valve gear.

Q. 45.—If an engine breaks any part of the machinery while on the road, is there any great difference in the method of disconnecting the disabled side and setting things right so as to proceed, as to whether the valve gear is of the Walschaert type or the Stephenson link motion?

A.—Yes; and if the break occurs within the valve gear the difference in time consumed in making the temporary repairs necessary to get the engine moving under its own steam is so greatly in favor of the Walschaert as to be one of the good reasons for its adoption, because it means less time lost in delays to the railroad's one source of revenue—the *turning* wheels.

When railway motive power was not so large and heavy as at present, and any part of the machinery on one side of an engine was broken so as to disable that side, it was the rule to take down the main rod

and block the valve after disconnecting the valve-stem; the main rod had to come down from one side, always, when the engine was only able to work steam on the other side. The piston was then held at the back end of the cylinder by blocking the crosshead, and the valve on that side was set so as to cover both steam ports by blocking it or clamping the valve-stem; not a great deal of knowledge or ingenuity was required; simply follow the custom.

Now, however, the enormous weight of the main rod generally prohibits taking it down on the road; leaving it up in place suggests that the piston will "drift" in the cylinder while the engine is running dead on that side, and that the crosshead will impart motion to the combination lever, *et al.* So that a few questions asked and answered on the subject of common breakdowns and the accidents that might happen to the parts of the Walschaert valve gear would be appropriate.

Q. 46.—In discussing the subject of breakdowns and the methods of procedure in consequence, "blocking the valve" will be mentioned several times; what is meant by that expression, and when and how should it be done?

A.—When any part of the valve gear is disabled on one side of the engine so that the valve will not receive its correct motion, or if any other part of the machinery

on that side of the engine is in such a damaged condition that steam must not be delivered to the cylinder of that side while the engine is working on the other side, the gear must be disconnected so far on the disabled side that the valve shall not be disturbed, after which the valve must be placed in a central position on its seat, by moving the valve-stem, whereby both admission ports to the cylinder are covered. After the valve has been correctly centred, if the throttle is slightly opened no steam will blow from the opened cylinder cocks on the disabled side of the engine. The cylinder cock rigging should then be disconnected on the damaged side of the engine, so that they could be set permanently open while the engineer opened or closed the cocks on the other side without interference; one reason for doing this is that if the valve should get moved far enough to start uncovering one of the admission ports steam would blow from the cylinder cock at that end of the cylinder and announce the shift of the valve when the throttle was opened.

On many roads a clamp is furnished and carried on every engine, by which the valve-stem can be secured immovably in a position that places the valve squarely over the ports. When such clamp was not at hand, it was formerly the rule, with a D-slide valve, to raise the steam chest cover and place retaining blocks

ahead and back of the valve; but it is almost an impossible task to raise the steam chest cover on one of our big, modern engines, and it is not at all unsafe to neglect the inside blocking; just centre the valve, and when steam is used it will put such a great weight upon the valve that its frictional resistance will cause it to adhere to the seat beyond any danger of its moving, unless the engine receives a hard bump as in switching or coupling to cars, and in that case the engineer will quickly discover the fact from seeing the steam at one of the cylinder cocks.

Inside admission piston valves are so perfectly balanced—*fore and aft*—that one need not hesitate to trust them to "stay put" without clamping; still, if there is a clamp provided, *use it.*

Some engineers with a high reputation for keeping the wheels turning in spite of mishaps, refuse to block the valve on the disabled side of the engine and they leave the main rod up, also; it is out of the question to take down, on the road, the heavy main rod that we now find on most engines, and if the engine subsequently stops with the live side on the dead centre, the disconnected valve can be temporarily moved far enough to open the desired steam port and enough steam then used to start the engine and get the working side off the centre; the air brake can then be applied to stop the engine with the live side off the

centre, and with the throttle closed the disconnected valve is again put on centre, and the train proceeds.

When the main rod is left up, the fixed-open cylinder cocks will generally give relief enough to prevent compression and vacuum in the cylinder as the piston churns forth and back, but for further relief some engineers always unscrew the cylinder cocks to provide an increased opening in each end of the cylinder. If the cylinder has by-pass valves they can be made to take care of the churning of the piston. The piston will run dry, however, and needs lubrication; oil must be introduced to the cylinder if the engine is to be run for any considerable distance. The lubricator may be allowed to feed oil to the steam chest on the broken-down side about the same as usual, and at certain stops along the road the valve can be moved by the valve-stem—if not blocked—enough to open one, or each alternately, of the admission ports and given a little steam, the oil collected in the steam chest will be blown down into the cylinder.

Q. 47.—If a side rod breaks, or should otherwise be removed from the engine equipped with the Walschaert valve gear, and no other damage results to the machinery, could it have the effect of totally disabling the engine?

A.—No. The engine would still work all right on the uninjured side in all such cases.

Q. 48.—Could the breaking of a side rod totally disable an engine with the Stephenson link motion?

A.—Yes, on certain types of engines where the eccentrics are attached to other than the main-axle—and this is quite common on engines with three or more pairs of driving-wheels—if a side rod connecting the main pair of driving-wheels with the pair that mounts the eccentric axle should break, the same section of side rod on the other side of the engine should be taken down, and this would render the valve motion inoperative. With the Walschaert gear the eccentric is *always* on the main pair of wheels, and therefore is unaffected by any damage to side rods.

Q. 49.—In cases requiring the valve to be blocked, the valve-stem should, of course, first be disconnected, or at least disconnection made at some point between the valve and the regular source of its motion, and with the Stephenson link motion the valve-stem is the most convenient place: Is it, with the Walschaert gear?

A.—No; it is practically out of the question to disconnect the valve-stem itself on most engines having the Walschaert gear, as it usually has a crosshead working in a guide and there is no place between the crosshead and the packing gland for its separation, but the same effect is produced by disconnecting the radius rod.

Q. 50.—If disconnection of the radius rod in the Walschaert gear has the same effect as disconnecting the valve-stem of the common link motion, then the radius rod will have to come down whenever the engine is so disabled on one side that the valve must be blocked; so you will explain in detail how one should go about it.

A.—The radius rod need not be *taken down* in all such cases of disability, but will always have to be, at least, disconnected.

Remove the pin from the joint of radius rod and combination lever and raise the disconnected end of the radius rod just above any chance of interference with the combination lever, suspending the rod by strong wiring or rope of such length as to permit it to swing freely to the motion of the link, taking particular care that the suspended end of the radius rod will not strike anything else. This method should only be resorted to, however, when the engine has only a short distance to go to reach its terminal and can be run at a moderate speed, only. In answer to subsequent questions on breakdowns the following instructions for disconnecting the radius rod should be observed:

If the engine is to be run any considerable distance, or may be speeded up at times, with one side disabled, a safer and more commendable method is, first, place

the reverse lever in the centre notch of the quadrant in order to get the back end of the radius rod and the link-block in the exact centre of the link; then saw a couple of pieces of wood to fit, and insert them between the bottom of the link and the link-block, and secure them in position in order to support the back end of the radius rod at the centre of the link; now disconnect the hanger between lifting arm and radius rod and take out the pin from the front end of the latter at its connection with the combination lever, wiring the radius rod up, as previously directed, or suspending it by anything that will support its weight, as there will be no motion imparted to it now. After centering the valve, and blocking it or clamping the valve-stem—or trusting that the pressure of the steam will hold it in its central position—it will not be necessary to do anything with the combination lever, as the motion imparted to its lower end will not be likely to affect the valve, even if not clamped; but,—after disconnecting the radius rod from the combination lever, always watch the first movement of the crosshead *to see that the combination lever does not strike the wrist-pin*—the pin by which the front end of the main rod is connected to the crosshead—as the motion of the lever is altered by the disconnection and pause of its upper end. Blocks of the proper size to hold the radius rod in the centre of the link, and with their upper ends

shaped half-round, should be carried on all engines equipped with the Walschaert valve gear.*

Q. 51.—What should be done in case of a broken radius rod?

A.—The best plan is to take down all of the pieces of the broken rod, disconnecting them from the combination lever, suspension bar, or hanger, and link-block; but if there is very much left of the rod forward of the link, it can be blocked up in the centre of the link, disconnected from the suspension bar, and its front end wired or tied up as before mentioned, and the valve centred and secured.

Q. 52.—When the suspension bar, or hanger, is connected to an extension of the radius rod back of the link, and that back extension of the rod should get broken off, or the suspension bar or lifting arm should break, what should you do?

A.—These troubles should be treated about alike. If the engine is to run forward, place a short block in the link under the radius rod or the link-block, so that the forward section of the radius rod will be held at about the same position in the link as the one on the

* The construction of the Walschaert link is a little different in detail as designed by the different locomotive builders, and the shape of the blocks to be used in the link when it is desired to carry the radius rod and link-block without motion, varies enough that it would not be practicable to illustrate a pattern.

other side when the reverse lever is in the notch that it will be expected to work in. An average should be struck in regard to this, as the reverse lever should neither be hooked up any further, after the positions of the radius rods have been matched, nor dropped a notch lower. Of course, the broken parts should be detached, and another block placed in the link *above* the link-block or radius rod to prevent their slipping up.

Q. 53.—An eccentric rod seldom breaks with the Walschaert gear, while it is not uncommon in the Stephenson link motion; if, however, the Walschaert eccentric rod should break, what then should be done?

A.—After removing the broken parts of a Walschaert eccentric rod throw the reverse lever to the forward corner notch in order to lower the radius rod and block to the bottom of the link; then disconnect the suspension bar from the radius rod, and the radius rod from the combination lever; raise the front end of the radius rod above interference, and, wiring through the pin hole, attach its forward end firmly and immovably to anything convenient and solid in order to keep the link from rotating, as with the eccentric rod detached there will be nothing but the radius rod to keep it steadied. Block the valve, etc., in the manner heretofore described, and proceed (see also page 185).

Q. 54.—If the valve-stem should break what course should you pursue?

A.—Disconnect the radius rod in the recommended manner and centre the valve, blocking or clamping the valve in this case if it were possible, and leave the combination lever in place, providing that as the lower end swings forth and back it does not strike the projection of the pin that connects the main rod to the crosshead, for its motion will be somewhat changed since there is no action of the slide at its upper end; this slide—from which the valve-stem has been disconnected by breakage—may be placed at any position on the slide bar that will provide a safer swing to the combination lever, and *should be blocked in that position* so that the motion of the lower end of the combination lever could not induce a movement of its upper end that would result in the valve being pushed off centre.

Q. 55.—If the long (lower) section of the combination lever or its connecting link to the crosshead, should get broken, what should be done?

A.—Detach the pieces of the link bar, or the broken-off, lower piece of the combination lever; disconnect the radius rod as explained before, and centre the valve. The remaining stub of the combination lever must be drawn out of the way, forward or back, so that it will not be struck by the pin in the crosshead to which the main rod is connected, when the main rod is not taken down and the crosshead has its regular motion in the guides.

Q. 56.—In all of these cases of breakage it has been assumed that we proceed, after doctoring up the temporary disability, by using steam on the other side of the engine but running with the main rod in place on the disabled side, and the reasons for it have been given; but suppose that the disability is the result of a *broken main rod,* and no other damage has followed: What should be done?

A.—In case of a broken main rod on an engine equipped with Walschaert valve gear, take down the parts of the broken rod and disconnect the radius rod as has been detailed before; if the valve is of inside admission, push it to the forward end of the steam chest and clamp the valve-stem or block the slide to hold it in that position, or, if the valve is of outside admission it should be drawn to the back end of its travel and secured there, the intention in either case being to keep the front admission port open for steam to enter the cylinder and the back port open to the exhaust. Then, with a bar, draw the crosshead as far as it will go toward the back end of the guides—until the piston is against the back head of the cylinder. This is termed "steam blocking," and while steam is being used the piston will stay placed, but in drifting down hill, or receiving a jerk from the rear end of the train at an application of the air brakes—bumps in switching, etc., while steam is shut off, the piston

is liable to get moved ahead and a sudden opening of the throttle would send it back with force enough to break the back cylinder head and ruin the guides; so, after placing the valve and piston as directed, it is best, also, to block the crosshead in that position. There will, of course, be no movement of the combination lever, and it should not be disturbed; the only motion of the valve gear on the disabled side will be that the eccentric rod will continue to give the regular motion to the link, but with the radius rod disconnected from its suspension bar and the combination lever, and centred in the link, the action of the link will have no effect.

Q. 57.—Suppose that the piston should get broken, or detached from the piston rod in the cylinder: What should be done in that case?

A.—Usually the result of this accident is to carry away, or break, the front cylinder head; the head should be removed, in either case, and the piston taken from the cylinder. If the piston rod is not bent leave the main rod up and disconnect the radius rod in the recommended manner, centre the valve, and go on. The cylinder cocks, in this case, need not, of course, be taken down as the cylinder is opened through the removed head and piston.

Q. 58.—In connection with the preceding accident suppose that the piston rod should be bent in the

cylinder: Would you leave the main rod up in place in that case?

A.—Certainly not. In addition to disconnecting the radius rod and covering the ports by centering the valve, as before stated, the main rod should always be taken down—no matter how slight the bend may be in the piston rod.

Q. 59.—What should be done in case of simply blowing out a front cylinder head?

A.—The radius rod should be disconnected in the regular manner, the valve centred, and the back cylinder cock, only, removed. About the only objectionable feature in running with the main rod up on the disabled side of an engine is not present in this case: It is not an easy matter, usually, to keep the piston lubricated, but with the cylinder head removed, oil can be introduced as often as may be necessary.

Breakage, or blowing-out, of the back cylinder head is of rather infrequent occurrence, but when it does happen, if the head is so slightly broken—say a piece knocked out—that it will stand the pressure of the piston under steam, the main rod can be taken down (for undoubtedly the piston rod would cramp in the stuffing-box if allowed to work) and the same process followed as with a broken main rod, as previously described, *steam-blocking* the piston, etc., as this saves time. In case the back head is completely

destroyed, however, the valve should be centred, covering both steam ports, the main rod taken down, and the radius rod disconnected and centred in the usual manner.

Q. 60.—If the link bar connecting the lower end of the combination lever with the crosshead should get broken and lost, from both sides of the engine, how could you measure for new ones?

A.—The length of these link bars could be closely approximated as follows: Move the crosshead into a central position that would indicate that the piston was in the exact centre of the cylinder, and place the reverse lever in the centre notch of the quadrant so that the link-block pin and the link fulcrum pin, or trunnion, are centred together; then move the lower end of the combination lever until the lever is in an exactly plumb, perpendicular position, and measure from the pin hole in its lower end to the pin hole in the crosshead arm to which the link bar should be connected, this distance being the required length of the link bar.

It is to be presumed that any one who is thrown into association with the Walschaert valve gear is familiar with the locomotive in general, and is already well-informed as to the methods of procedure in cases of breakdowns of the different parts of the machinery other than the valve gear, and for that reason no

troubles have been made the subject of questions except those that are peculiar to this style of gear, or that must receive different treatment from that which they would in connection with the Stephenson link motion. There are many troubles that can, and will, occur on the road that are not noted here, but by understanding that which has been explained in this book, any engineer that can keep the wheels turning in the presence of the common disabilities that occur to engines of the link-motion class, can also be ready to meet any troubles that may possibly happen to the Walschaert gear.

Addendum to Answer to Question 53 on page 179: In case of broken eccentric rod or eccentric crank, if it is possible to secure the link block in the *exact centre* of the link, do so, and disconnect the suspension bar from the radius rod; remove the broken parts—and the eccentric rod, if the eccentric crank is broken—and proceed. This method will permit the valve to have its *short*—lap-and-lead—travel, and will provide the lead port-opening when the piston is at either end of the cylinder; preventing compression and vacuum in the cylinder when the main rod is left up and the piston is in motion, and permitting oil from the lubricator to reach the cylinder and prevent its cutting.

FIFTH DIVISION

SETTING VALVES WITH THE WALSCHAERT VALVE GEAR

FIFTH DIVISION

SETTING VALVES WITH THE WALSCHAERT VALVE GEAR

An understanding of the method of *valve setting*, or "squaring the valves," was a very real necessity to roundhouse men, and enginemen as well, in the days when the Stephenson link-motion was exclusively used on locomotives, and this has influenced a great many to think that about the first knowledge an engineman or shopman should obtain of any newly adopted style of valve gear is "how to set the valves." It is not remarkable that this idea should so widely prevail, for it was usual that any engine that came out of the back shop with valves squarely set, would not continue in service very long until its irregular exhausts, in either or both points of full gear, indicated that one or both of the valves were "out."

On the preceding pages of this book, the many causes that may separately or collectively throw the valves of the link motion out of true have been mentioned; but this fact has been repeatedly emphasized, that *the valves of the Walschaert gear do not get out of square* in service, nor *if they did would it be possible for them to be squared*

outside of the back shop. And if a locomotive with Walschaert gear should enter the back shop with her valves somewhat "out," a general trueing-up of the whole engine—the frames, rebushing pin holes in the valve gear, refitting driving boxes, etc., will in nearly every case be all of the "valve setting" that is required. If, in a wreck, part of the valve gear should be destroyed, the repairs should be a job for the back shop, where the manufacture of the new pieces of the gear and the re-erection of the locomotive should be from the original blueprints—and the valves will invariably set themselves.

Directions for valve setting with the Walschaert gear have appeared in the railroad journals from time to time, but generally these assume inaccuracies in the location of the eccentric crank in its relation to the main crank-pin, incorrect lengths of the radius rods, etc.—conditions almost impossible to obtain in service; but here again we have—or should have—our blueprints. The directions for calculating the exactly true location of the Walschaert eccentric, and for trueing incorrect lengths of the radius rod, are too complicated and confusing for the average roundhouse man and engineman; and in the great number of cases those parts *only seem to be incorrect* in lengths or location, on account of displacements outside of the valve motion.

However, a few directions will be given here for testing and correcting in the easiest manner such possible inaccuracies, for equalizing the valve travel, and for adjusting the "short travel" of the valve after altering the steam lap, or when wishing to change the lead of the valve.

First, see to it that the wedges are set up snugly, and that there is no undue lost motion in the driving boxes.

To Test the Length of the Radius Rod: It is best to do this with the main rod disconnected. Place the reverse lever in the centre notch of the quadrant, and move the crosshead of the piston until the combination lever is standing perpendicular—its upper two connection pins on the one vertical line (by sight; you need not plumb it at this time). Now rotate the main pair of wheels until the link is in the strictly vertical position in which the valve will stand at exactly the same spot with the reverse lever in *either full gear position*—fix the position of the link by shifting the reverse lever from one corner notch to the other, and noting finally that the valve-stem crosshead remains in, or returns to, the same position in each corner notch; having fixed the position of the link, have the reverse lever moved from either corner notch to the centre of the quadrant, and if this movement of the link block to the centre of the link should shift the position of the valve-stem crosshead, the radius rod is too short or too

long. If the valve-stem crosshead is pulled toward the link the radius rod is too long; if it is pushed toward the steam chest, the radius rod is too short. With the link fixed vertically as directed, and the reverse lever in mid-gear with the link-block pin in even register with the link fulcrum pin, use an adjustable tram and find a point along the horizontal line of the pin connecting the radius rod with the combination lever, that will have the same distance from the centre of the link-block pin as from marks scratched on each end of the link indicating the middle of the link slot; this distance will equal the correct length of the radius rod between centres of pin holes connecting it with the link block and combination lever.

Any rule for correcting the length of the radius rod, proportioned on the distance the valve stem is shifted in moving the link block from full gear to the mid-gear position, would be too complicated for consideration here.

The Eccentric Rod: The effective length of the *eccentric rod* may become untrue after the engine has been in service for some time, and is the only piece of the gear of which an inaccuracy should ordinarily be suspected. With the main rod connected up, place the main crank-pin on the *exact* dead centre; this position is found as follows (see Fig. 38).

To locate Crank Pin on the Dead Centre: Turn the

main driving wheel until the crank pin is nearing the centre that is desired, and when the crosshead is within about one inch of its extreme point of travel make an intersecting mark on crosshead and guide bar; with a tram resting upon some fixed point of the engine—preferably the guide yoke—locate the point *a* (see Fig. 38) on the side of the driving-wheel tire; then continue the rotation of the wheel until the crosshead has

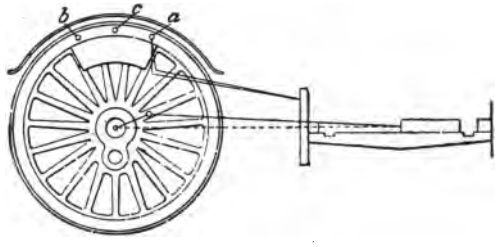

FIG. 38.—Tramming Driving Wheel to Locate the Dead Centre.

passed its extreme point of travel, and starting back has again reached the point where the marks on crosshead and guide bar are in exact register, stop, and with the tram locate a second point, *b*, on the tire at an equal distance from the centre of the axle as point *a;* with a pair of dividers locate the point *c* on the arc midway between *a* and *b;* now rotate the wheel to the exact dead centre, which has been secured when the two points of the tram rest on the marks on guide yoke and point *c*

on the wheel. Either dead centre may be established in the same way.

With the main crank-pin on (say the forward) exact dead centre on one side, have the reverse lever moved from the go-ahead corner notch up toward the centre of the quadrant; while the link block is rising, if the valve stem is pushed forward slightly the eccentric rod should be lengthened; but if the valve stem should be drawn backward by the rise of the link block, the eccentric rod needs to be shortened. In either case make but slight changes in the length of the rod, and keep on testing until hooking up the lever to the centre has no effect on the valve stem; the effective length of the eccentric rod is then correct. Then test, and alter if necessary, the other side in the same way, but with the main pin on the back—or opposite—dead centre.

To determine the proper proportions of the Combination Lever ("*lap and lead* lever"): Whenever it is desired to increase or diminish the *lead* without changing the steam lap of the valve, it can only be done by altering the proportions of the combination lever; and after the *lap* may have been reduced or increased, the proportions of the combination lever must be changed to suit, if the original amount of lead is to be retained.

Any change in the proportions of the combination lever should be in shortening or lengthening the long (lower) portion. The short (upper) portion should

never be altered in length; one reason being that such alteration would change the angularity of the radius rod; and, further, the upper end of the combination lever is so extremely short in comparison with the lower end, that to make the modification there the calculations would indicate fractions so small as to be impossible for the mechanic to work with; while a seemingly slight error in the length of the short end would introduce a noticeable irregularity in the valve's motion, yet an error of the same distance in the length of the long end of the lever would probably have no appreciable influence on the valve.

The "*long travel*" of the valve is the motion imparted by the eccentric; and the "*short travel*" is that derived from the main crosshead and imparted to the valve by the angularity of the combination lever. Place the reverse lever in the centre notch of the quadrant, link block in the *exact centre* of the link; now rotate the main drivers a full revolution and the valve will travel between its limits in each direction, a distance equal to twice the lap plus the lead.

With outside-admission valves the valve stem is connected with the upper end of the combination lever, while with inside-admission valves the radius rod is connected at the top, and the valve-stem connection is the intermediate one.

For Outside-Admission Valves.—Divide the piston

stroke by twice the steam lap plus lead, and multiply the quotient by the short end of the combination lever; the result is the proper length of *long end* of the combination lever (from centre to centre of pins connecting radius rod and crosshead link with combination lever).

Example.—An engine having 30-inch piston stroke, outside-admission valves with $\frac{7}{8}$-inch steam lap, having $\frac{5}{32}$-inch lead. While in the back shop, it is desired to change this to $\frac{15}{16}$-inch lap and $\frac{3}{16}$-inch lead. The *short end* of the combination lever is 3 inches between centres of pins. We wish to find the required length of *long end* of combination lever to suit the readjustment.

Lap ($\frac{15}{16}''$) plus lead ($\frac{3}{16}''$), multiplied by 2, equals $2\frac{1}{4}$ inches. Piston stroke ($30''$) divided by $2\frac{1}{4}$ equals $13\frac{1}{3}$; $13\frac{1}{3}$ multiplied by 3 (length of short end of lever) equals 40 inches, which is the correct length of the *long end* of the combination lever.

For Inside-Admission Valves.—Divide the piston stroke by twice the steam lap plus lead, and multiply the quotient by the short end of the combination lever, the result equalling *the whole length of the lever;* subtract from this the length of the short end of the lever, and the remainder will equal the proper length of the *long end* of the lever—the distance between the centres of pin holes connecting it with valve stem and crosshead link.

Such readjustments of the proportions of the com-

bination lever result in a slight difference in the *long travel* of the valve, but really so slight as to be of no moment.

If it should be desired to increase the lead by an equal reduction of the lap of the valve, or to reduce the lead by an equal extension of the lap, it should not be necessary, of course, to make any change in the proportions of the combination lever.

Lastly, the reverse lever should be set in mid-gear, bringing the link block into position at the *exact centre* of the link, in which the revolution of the driving wheel and the oscillation of the link *will impart no movement to the radius rod;* then revolve the main drivers, and see that the *short travel* of the valve, secured from the piston and crosshead, *gives an equal lead opening at each end of the valve.* On page 112, one of the locomotive-builders is quoted in "Notes for adjusting Walschaert gear," as follows: "The tram marks of the opening moments at both ends of the valve should be marked on the valve stem, and *the latter lengthened or shortened until equal leads at both ends are obtained.*" To easily accomplish this equalization of the position of the valve, the valve rod is usually fitted with adjustable threaded nuts.

A model of the Walschaert valve gear with all parts made so that they may be adjusted in length, is one of the greatest helps to the student of this motion. There

are several such models made for sale, one of which is illustrated in Fig. 39.

OTHER VALVE GEARS

A great number of steam-valve actuating mechanisms are in use, of which only a very limited number are applicable to locomotives; and those which are may be divided into three general types, comprising, first, the "Stephenson" double eccentric gear with which every one is familiar, and which has been generally used on American locomotives until recently; and this type also includes the Allan and the Gooch valve gears. Secondly, there is the Walschaert type which is the principal subject in this book. Third, the Hackworth gear; this motion was invented by John Wesley Hackworth and patented by him in 1859; the principle is illustrated in Fig. 40, and is the mechanical movement upon which is based the Joy and other similar valve gears; in 1879, Marshall patented an arrangement of the Hackworth idea, in which a shifting radial lever was used instead of the straight link and slide of the eccentric rod.

Referring to Fig. 40, the Hackworth valve gear is explained as follows: the link, *L*, is suspended from a fixed fulcrum or trunnion pin, at its centre, upon which it can be oscillated and fixed at different angles by the reversing arm, *R*, which may be considered as an or-

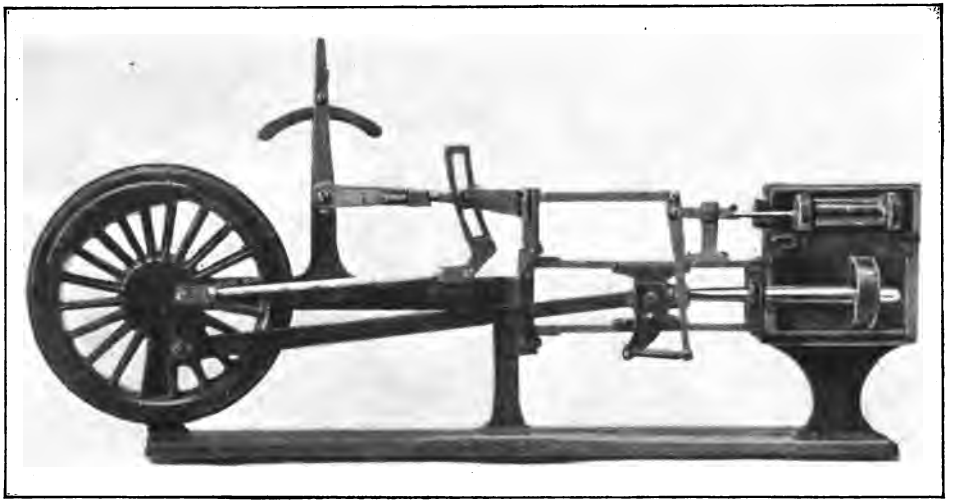

FIG. 39.—Instruction Model of Walschaert Valve Gear.

dinary reverse lever; the link fulcrum is on the vertical line through the centre of the main axle. *E* is the eccentric (the terminus of a "return crank" from the main pin). The eccentric rod *D* is connected at its extreme upper end *A* with the valve rod, and connected intermediately with the sliding link-block *B*. The eccentric's advance is zero (in this case with outside-admission valve), located on the line from axle centre to centre of crank pin. Now, if the *valve* should not have the advance that is always given it to overcome the *lap* and secure the *lead*, there would be no necessity for the extension of the eccentric rod above the link-block *B*, it would terminate at the link-block pin with which the valve rod would also connect, and in that event the vertical centre line *P* of the valve would register evenly with the centre *C* of the valve seat; as it is, the angle formed by the short upper section of the eccentric rod has advanced the valve far enough slightly to uncover the forward admission port to the cylinder —the distance between lines *C* and *P* equalling the *lap plus the lead.*

When the engine is started forward, the eccentric moving downward draws block *B* down also, but on account of the angle of the link, the block moves backward as well, and the valve is drawn its regular traverse to the right to open more fully the left admission

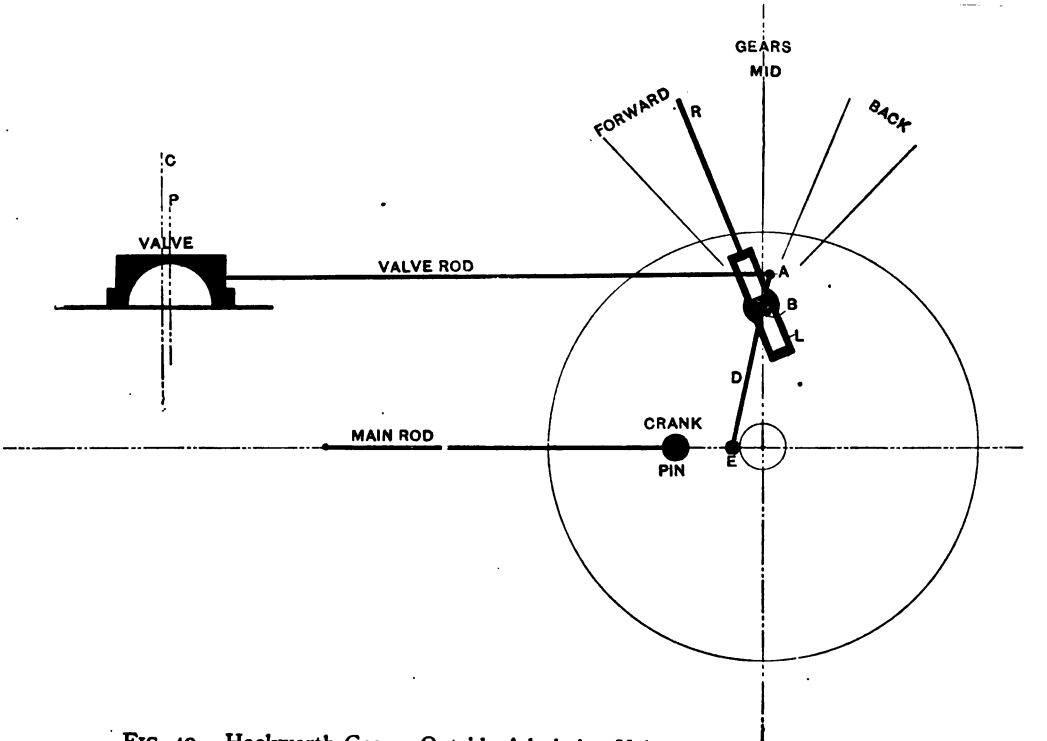

FIG. 40.—Hackworth Gear. Outside Admission Valve.

port. When the crank pin has reached the back dead centre, the angle of the eccentric rod will be in reverse direction from its appearance in the cut, and the centre of the valve will be the same distance from the middle of its seat as is shown, but to the left, thus providing the lead opening to the back, or right-hand, admission port. If lever *R* should be moved further forward, the increased angle of the link would give a longer forward-and-back motion to the link-block and a lengthened travel of the valve; *hooking up* will have the opposite effect, until with lever *R* in mid-gear the only motion given to the valve would be its *short motion* equal to twice the lap plus lead. With the engine standing as shown in the cut, if lever *R* should be thrown into back gear, it is plain that, as the eccentric's movement is upward as the wheel turns backward, the link-block will be moved *back* and up, and the valve will again be moved in the right direction.

With a valve of inside admission, the eccentric must be located 180 degrees from the crank pin—just opposite its present position—and this fixes the valve's advance and prospective travel in the opposite direction to the design here shown.

In this style of valve gear (as in Walschaerts') the lead is constant; proven when the crank pins are on either dead centre, by shifting the reverse lever from

FIG. 41.—Locomotive with Hobart-Allfree Cylinders, Valves and Valve Gear.

one full gear position to the opposite extreme by which the valve will not be moved.

THE HOBART-ALLFREE CYLINDERS, VALVES AND VALVE GEAR

Cylinders and Valves.—The Hobart-Allfree cylinder and piston, valves and valve chambers, are shown in Figs. 42, 43, and 44. The advantages claimed in their use are increased pulling power and greater speed, economy in steam and fuel, cheaper cost of maintenance and more mileage secured from the engine, due to—*reduced heat losses* (short ports, and the insulation of the live steam); *less steam used for a given cut-off* (waste spaces in cylinders reduced to a minimum); *higher ratio of expansion* (as the result of dividing the steam distribution between two valves); *perfect exhaust* (for the same reason, and giving a better draft on the fire, with reduced back pressure); *reduced "negative" work* (very late exhaust closure—only enough compression to provide for the cushioning of the piston); together with an *increased turning effort on the drivers.*

Of the *four valve events* embraced in the proper steam distribution in the cylinders of an engine, the single valve of any style can perform *three* perfectly: *admission*, *cut-off*, and *release*, but the *fourth*—known as the *closure* or *compression* event, is wrong. If the

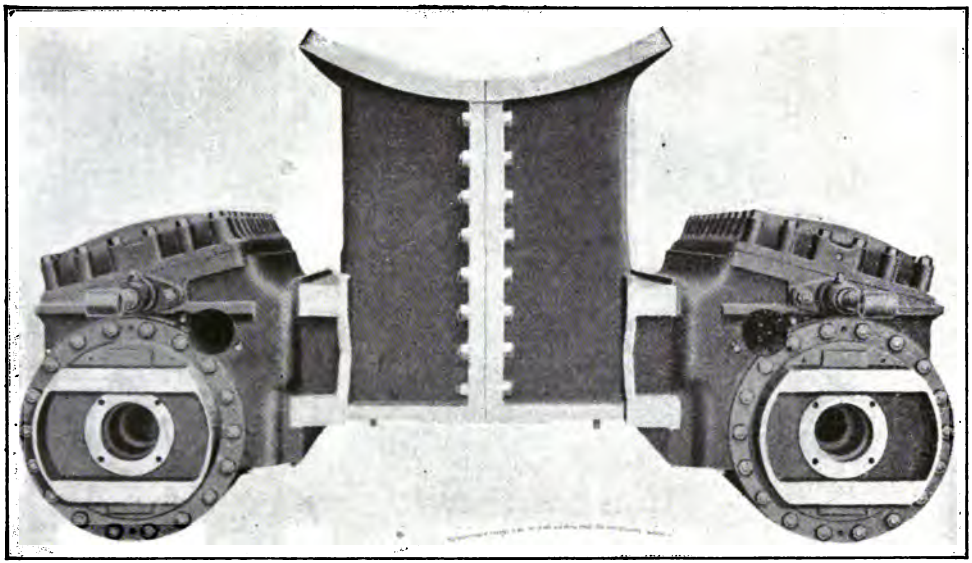

FIG. 42.—Back End View of Hobart-Allfree Cylinders.

valve is provided with a sufficient amount of exhaust lap to obtain economic expansion by delaying the release, the exhaust closure becomes excessively early, and an excessive clearance space must be provided, equal to fully 15% of the piston displacement; this entails such a loss that a compromise is generally effected by reducing the exhaust lap, making the release earlier but delaying the closure to a point where not to exceed 10% of clearance space need be provided. This requires a valve having its exhaust edges about equal to the exhaust edges of the ports, generally designated as "line and line," or, if the valve is cut a little shorter, giving about $\frac{1}{8}$-inch exhaust clearance, the clearance or waste spaces may be reduced to about 8% of the piston displacement. Any further reduction of exhaust lap would result in a greater loss through an early release than would be gained through a reduction of clearance.

In the Allfree system a single valve correctly controls admission, cut-off, and release, the same as in the standard engine, except that a sufficient amount of exhaust lap is used to carry the steam to a point that will give a greater expansion; then, to avoid an early closure, a small piston valve, called the compression valve, is introduced through a section of the ports beneath and to one side of the main valve, and has only the function of *controlling the compression* and providing

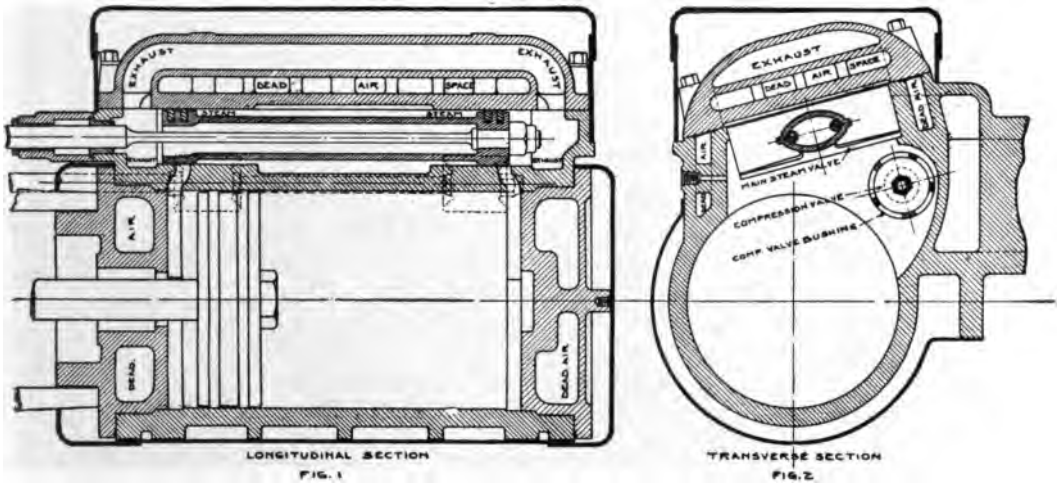

FIG. 43.—Sectional Views of Hobart-Allfree Cylinders and Valves.

greater freedom for the escape of exhaust steam. While the two valves release at the same instant, the compression valve in closing falls about $1\frac{1}{4}$ inches behind the main valve; this allows the exhaust steam that would otherwise be in compression to escape until the piston reaches about 90% of its stroke (at $\frac{1}{4}$ cut-off), or within $2\frac{1}{2}$ or 3 inches of the end of its stroke. The clearance having been reduced to $2\frac{1}{2}$% of the piston displacement, a sufficient amount of compression takes place perfectly to cushion the reciprocating parts.

Fig. 42 is a photo view showing the back end of the cylinders and valve chambers; the bore of the compression-valve chamber will be noted inside and a little below the level of the valve stem, in each cylinder. The steam chest or main-valve chamber, is on an angle of 15° and placed close to the cylinder bore, thus securing short and practically straight ports. The compression-valve chamber passes through the longest section of the ports, and is bushed in the usual way; a tube spans the space between the two bushings, forming a separate chamber closed off from the live-steam pressure—see Fig. 44. The steam-chest cover forms the top side of the main-valve chamber and provides a by-pass connection between the exhaust passages, which equalizes the exhaust pressures. The cylinder and steam chest or valve chamber are one casting.

The main steam-valve is of rectilinear form rigidly

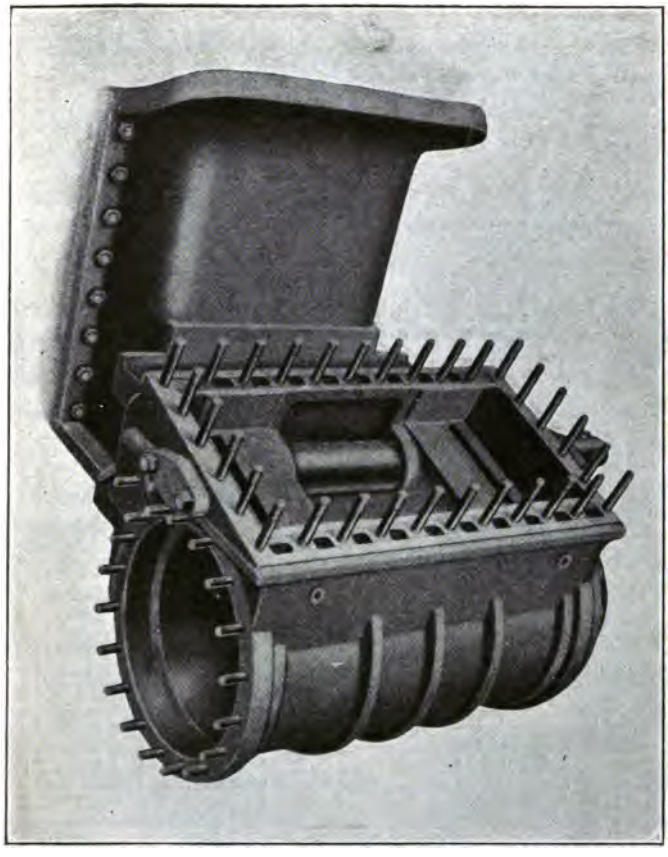

FIG. 44.—Top View of Hobart-Allfree Cylinder and Steam Chest, with Steam-Chest Cover Removed.

constructed; it is balanced for all speeds and under all pressures, running or drifting, and the wear on the valve and valve seat is very slight.

The compression valve is a piston valve of the usual design except that it is very light, and provided with wide snap rings to overlap the ports and for protection against wear; it takes its motion direct from the valve gear through an independent connection with the combination lever.

The admission of steam to the cylinders and the cut-off is controlled by the main steam-valve. Steam is admitted along the entire lower edge and up one side, providing an unusually large port area for admission. Exhaust also is controlled by the main steam-valve, but to this is added the exhaust of the compression valve which releases simultaneously with the main valve.

Closure or compression is controlled entirely by the compression valve which delays the final closure of the exhaust until the piston has completed 90% of its stroke at the short cut-offs, thereby reducing the volume of the exhaust steam in compression from about 10 inches in the usual practice, to $2\frac{3}{4}$ inches in this system. The main steam-valve, although working on a plane seat and of the slide-valve type, is of inside admission and divides the central, live-steam chamber from the exhaust chambers at each end somewhat like

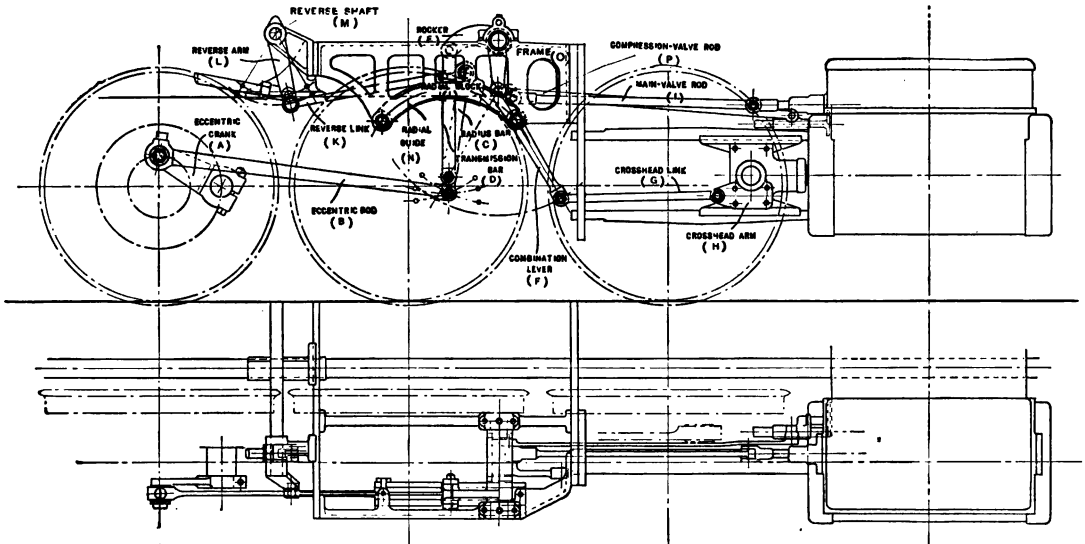

FIG. 45.—Side Elevation in Outline of the Hobart-Allfree Valve Gear.

the ordinary piston valve. The pistons of the compression valve pass through the longest section of the admission ports from which they exhaust past their outer ends. The compression valve and its valve stem are shown in dotted lines in the longitudinal section view in Fig. 43.

The Valve Gear.—This is an outside, radial gear that comes within the Hackworth division of valve motions, but like Marshall's modification of that principle no link is employed, the single eccentric giving a pendulum-like motion to a suspended lever from which the motion of the valve is derived; by shifting the point of this lever's suspension, the lower end will swing at different angles, and shorten or lengthen the travel of the valve, or reverse its motion. The eccentric is of the Walschaert style worked from a crank on the main pin; and a combination lever actuated by the crosshead is used to distort the motion of the valve rod for the purpose of advancing the position of the valve, to overcome the effect of the steam lap when the piston is at the beginning of its stroke, as in the Walschaert gear.

The action of this valve gear may be followed by reference to the line drawing, Fig. 45, and the diagram, Fig. 46, in connection with the following explanation:

Beginning with the eccentric crank *A*, motion is

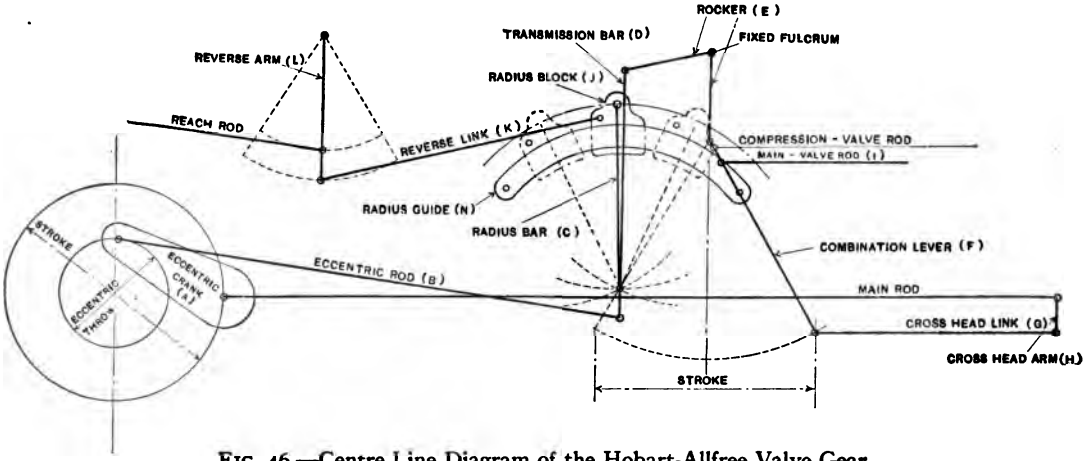

FIG. 46.—Centre Line Diagram of the Hobart-Allfree Valve Gear.

transmitted through the eccentric rod *B* to the transmission bars *D* and the radius bar *C*. The radius bar *C* is pivoted on the radius block *J*, which is movably mounted on the radius guide *N*.

When the radius block *J* is in centre position, the transmission bar *D* oscillates in unison with the radius bar *C*, and no motion is transmitted from the eccentric crank *A*. The radius block *J* is operated from the reverse lever by the usual reach rod, through the reverse shaft *M*, reverse arm *L*, and reversing link *K*, and its position upon the radius guide *N* determines the amount of cut-off in the forward or backward motions. When the radius block *J* is thus moved to a position on the radius guide *N*, either in front of or back of the central position, the radius bar *C* and transmission bar *D* no longer oscillate in unison, and motion is transmitted to the bell crank or rocker *E* to the upper end of which one end of the transmission bar *D* is attached.

The motion thus transmitted to the lower arm of the bell crank *E* is combined at this point with the motion which the combination lever *F* receives from the crosshead through the crosshead link *G* and crosshead arm *H*, and is transmitted to the valve by the valve rod *I* as usual; the motion received from the combination lever is equal to *lap plus lead*, as in the Walschaert motion.

KANSAS CITY SOUTHERN RY. ENG. No. 486

		CUT OFF POSITION	CUT OFF		PRE ADMISSION		LEAD		PORT OPENING		RELEASE		CLOSURE		VALVE TRAVEL
			Front	Back	Front	Back	Front	Back	Front	Back	Front	Back	Front	Back	
FORWARD MOTION	RIGHT HAND SIDE	Full Gear	25 3/4"	25 7/8"	1/16"	1/16"	3/16"	3/16"	FULL	FULL	29 1/2"	29 1/2"	1/8"	1/8"	7"
		50%	15"	15 1/4"	1/4"	3/16"	3/16"	3/16"	3/16"	3/16"	27 1/4"	27 1/8"	3/4"	3/4"	3 3/8"
		33%	10"	10 1/8"	3/8"	3/8"	3/16"	3/16"	15/32"	15/32"	26 1/4"	26 1/4"	1 5/8"	1 5/8"	3 3/16"
		25%	8 3/4"	8 3/4"	3/16"	9/16"	3/16"	3/16"	11/32"	11/32"	25 1/2"	25 1/2"	2 3/8"	2 3/8"	2 15/16"
	LEFT HAND SIDE	Full Gear	25 3/8"	25 7/8"	1/16"	1/16"	3/16"	3/16"	FULL	FULL	29 3/8"	29 3/8"	1/8"	1/8"	7"
		50%	14 7/8"	15 1/8"	1/4"	3/16"	3/16"	3/16"	9/16"	9/16"	27	27	3/4"	3/4"	3 3/8"
		33%	9 3/4"	10"	3/8"	3/8"	3/16"	3/16"	7/16"	7/16"	26	26	1 5/8"	1 5/8"	3 1/8"
		25%	8 1/4"	8 1/4"	3/16"	9/16"	3/16"	3/16"	5/16"	5/16"	25 1/4"	25 1/4"	2 3/8"	2 3/8"	2 7/8"
BACKWARD MOTION	RIGHT HAND SIDE	Full Gear	26 1/8"	26 1/4"	1/16"	1/16"	3/16"	3/16"	FULL	FULL	29 1/2"	29 1/2"	1/8"	1/8"	7"
		50%	15"	15"	3/16"	3/16"	3/16"	3/16"	9/16"	9/16"	27 1/4"	27 1/4"	3/4"	3/4"	3 3/8"
		33%	9 3/4"	10"	3/8"	3/8"	3/16"	3/16"	7/16"	7/16"	26 1/8"	26"	1 9/16"	1 9/16"	3 1/8"
		25%	7 3/8"	7 1/2"	9/16"	9/16"	3/16"	3/16"	9/32"	9/32"	24 3/4"	24 3/4"	2 1/2"	2 1/2"	2 13/16"
	LEFT HAND SIDE	Full Gear	25 7/8"	26"	1/16"	1/16"	3/16"	3/16"	FULL	FULL	29 1/2"	29 1/2"	1/8"	1/8"	7"
		50%	15	15"	3/16"	3/16"	3/16"	3/16"	9/16"	9/16"	27"	27 1/8"	3/4"	3/4"	3 3/8"
		33%	9 5/8"	9 3/4"	3/8"	3/8"	3/16"	3/16"	15/32"	15/32"	26 1/8"	26 1/8"	1 9/16"	1 9/16"	3 3/16"
		25%	8 3/8"	8 1/2"	9/16"	9/16"	3/16"	3/16"	5/16"	5/16"	25 3/8"	25 3/8"	2 1/2"	2 1/2"	2 7/8"

CYLINDERS 22"×30", STEAM LAP 1 1/8", EXHAUST LAP 7/16"

FIG. 47.—Chart Showing Valve Events and the Moments of Steam Distribution on a Locomotive with Hobart-Allfree Valves and Valve Gear.

When this motion is used with the Allfree cylinders a separate and independent valve rod is attached to the combination lever to drive the compression valve; this compression-valve rod *P* is shown in Fig. 45. And where the Allfree cylinders are used with the Walschaert gear, the compression-valve rod is connected with the combination lever in similar manner.

As will be noticed in Figs. 41 and 45, the connection of eccentric rod with transmission bar is on the centre line of motion, and the movement of the engine on its springs can have no effect on the cut-off. And there is no resetting of the valves after the motion has been erected, unless the engine should have its frame and motion work bent in a wreck; and in which contingency, if repairs are made with regards to blueprints, there will be no "valve setting" except to equalize the travel of the valve, possibly, by correcting the length of the valve stem. In fact, "*once set, always square*" can be quoted with reference to any of the radial valve-gears that are taking the place of the old, double-eccentric link motion on our modern American locomotives.

A valve-motion report is shown in Fig. 47 which gives the complete valve events in both forward and backward motions.

QUESTIONS AND ANSWERS ON BREAKDOWNS

With the Hobart-Allfree Gear

Question 1.—If the main-valve rod should break, how can the engine be put in condition to work on the other side alone?

Answer.—Clamps for main-valve stem and compression-valve stem should be carried on every engine. In this case, remove the parts of the main-valve rod, set the valve centrally to cover all ports, and clamp the stem. Figs. 43 and 44 show two plugged holes in the steam-chest, one near each end of the cylinder, that lead to either admission port; remove both plugs and oil the cylinder through the holes. Proceed, but give the cylinder a little more oil every now and then, to keep the piston from cutting the walls of the cylinder.

Q. 2.—If the main-valve rod and the compression-valve rod both fail, how should one proceed to remedy the trouble?

A.—After removing all the pieces of both rods, proceed the same as in answer to Question 1.

Q. 3.—Suppose the compression-valve rod only should become broken, what then?

A.—The compression valve can be put out of service without disabling the engine on that side, though there will be a certain loss of power there and a limit to the engine's speed. As to repair, it will only be necessary to centre the compression valve and clamp its stem, after removing the broken pieces. There will be a blow while each admission port is getting steam, due to the opened "exhaust clearance" at both ends of the compression valve when clamped in the central position. This exhaust opening amounts to about one-eighth of an inch.

Q. 4.—If the reverse link or reverse arm should break, what should be done?

A.—Move the radial block to the position on the radial guide in which the valve will give the longest cut-off that will be demanded during the balance of the trip, and block it there securely; remove the broken parts and go on, carrying the reverse lever in the notch that will cause an equal cut-off on the uninjured side of the engine.

Q. 5.—Suppose that the reach rod from the reverse lever, or the reach-rod arm, or the reverse shaft should break, what then?

A.—If the reach rod or reach-rod arm should break, secure the radial block in the proper working position as previously explained, on one side only. If the reverse shaft were broken, however, the radial

block on each side should be blocked in the proper position.

Q. 6.—In case of eccentric rod or eccentric crank failure, how can you overcome the trouble?

A.—Remove the broken parts, and if it is the crank that is broken take down the eccentric rod; push the transmission bar into a strictly vertical position and tie it there from each end of the radial guide, and then proceed on your way. There will not be a great deal of strain on the lashings that secure the transmission bar, and by this method the valve will have its lap-and-lead movement derived from the crosshead, through the combination lever; the admission port will be slightly open when the piston is at the beginning of either stroke, thus admitting of oil from the lubricator reaching the cylinder; also relieving compression.

Q. 7.—If the transmission bar fails, what must be done?

A.—If the short, lower portion should break between the two connection pins, arrange the same as explained in answer to the previous question; but if the long, main portion is broken, remove the detached piece and the eccentric rod, lash the remnant of the transmission bar and the radius bar so they will not swing in the way of anything else—or remove them—and block the bell crank with the vertical arm in a plumb perpendicular position (as shown in Fig. 45), by blocking

through, or lashing the bell-crank arms to the gear frame. Then move on, with the valve having the short lap-and-lead travel as heretofore explained. If the rocker arm *E* of the bell crank should break off, proceed in the same manner, after removing broken parts and the transmission bar and eccentric rod.

Q. 8.—If the bell crank should break, how do you fix things?

A.—If the upper, or *rocker arm E* of the bell crank is broken, get the answer in the preceding question. If the vertical arm fails, the main-valve rod and the compression-valve rod must be disconnected from the combination lever and tied up to clear other parts, and the combination lever and crosshead link must come down; then block the main and compression valves, and proceed on your way—on one side.

Q. 9.—How can you provide for getting along with a broken combination lever?

A.—About the only thing to do is to remove the crosshead link and both pieces of the combination lever, disconnecting the main-valve rod and compression-valve rod, of course, and tie their ends up to clear the lower arm of the bell crank; block both valves at the centre of their travel, and proceed on one side.

Q. 10.—How could you adapt the valve gear to a working condition when the crosshead link should be broken?

A.—It would be well worth while to be prepared with a remedy for this accident, for otherwise the engine would be disabled on the one side; this would necessitate reducing the train load, if the engine already had its full rated tonnage; and reducing the train load on account of disability of the locomotive is one of the definitions of *engine failure* on most roads.

Remove all pieces of the crosshead link; and if a rod or lever can be obtained which, with one end fastened to the guide yoke and the other end fastened to the lower end of the combination lever, will hold the combination lever in a vertical position—that is, with the pin hole in the lower end of the lever on a plumb perpendicular line through the centre of the rocker, or bell-crank shaft—you can go right on with your train; some power is lost, of course, through the suppression of the lap-and-lead motion regularly received from the crosshead; but the valve will have its "long travel" from the motion of the eccentric, and in full gear will take the train right along.

If the combination lever can not be so secured, its lower end should be swung over to within ten or twelve inches of the guide yoke and fastened there by wire or stout cords, the main-valve rod and the compression-valve rod disconnected from the combination lever and tied up out of the way, and the valves centred and

clamped as usual in such disconnections; then proceed, under the power of the other side of the engine.

Q. 11.—If the radius bar fails, what should be done?

A.—Remove the broken pieces of the radius bar; block the bell crank with the vertical arm in a plumb perpendicular position, by blocking through or lashing the bell-crank arms to the gear frame. The front end of the eccentric rod will now be supported by the transmission bars. Proceed, with the valves receiving the lap-and-lead motion as has been previously explained.

THE BAKER-PILLIOD VALVE GEAR

This highly efficient valve motion combines the main features of the Walschaert gear with the principle of Marshall's modification of the Hackworth gear, and certain original and clever movements that overcome most of the objectionable features found in the valve motions heretofore used on locomotives. The motion work is all outside the engine frame where it is easy of inspection, lubrication, and repair; the latter in particular, as all points of motion transmission are fitted with hardened pins and bushes, and lost motion due to wear is at a minimum; and there are no expensive "links" in this gear—it is simply an ingenious system of levers, with no eccentric sheaves and straps nor sliding blocks.

The manufacturers have recently introduced an im-

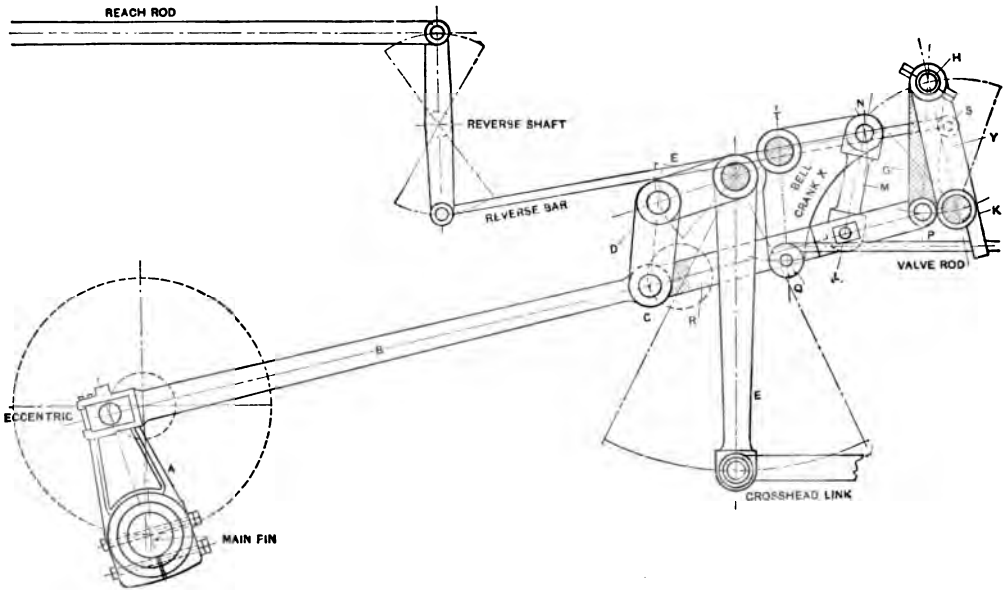

FIG. 48.—Baker-Pilliod Valve Gear Arranged for Outside Admission.

proved design of the Baker-Pilliod valve gear, and which will be referred to in detail; but as most of the locomotives so far equipped have the original style of the gear, the latter will be described first. Referring to Fig. 48 in which the gear is arranged for outside admission, an eccentric crank *A* is attached to the main pin as in the Walschaert gear, and the forward end of the eccentric rod is connected with the transmission bar at pin *C*. The combination lever *E* is in the form of a bell crank which is supported at its upper end by a fixed fulcrum, and through which the forth-and-back motion received from the crosshead is transformed into an up-and-down motion, delivered to pin *C* through the link *D;* pin *C* therefore travels in a circular path, as shown in the cut, due to the forward-and-back impulse of the eccentric rod and the raising-and-lowering effect of link *D*. The motion of the eccentric rod is therefore always in parallel, as both ends describe uniformly almost the same circular paths.

What apparently is a lever, *Y*, is really a yoke rocking on the fixed fulcrum, *K;* the reverse bar connects with this yoke at *S*, and the position of the yoke is fixed by the position of the reverse lever, pin *H* at the upper end of the yoke moving through the arc as shown. From pin *H* the radius bar *G* depends, pin *P* at its lower extremity carrying the forward end of the transmission bar *R*. The transmission bar has only three

connections—pins *C*, *L*, and *P;* ignoring pin *L* for the moment, it will be perceived that the circular motion of the back end of the transmission bar at pin *C* will produce a pendulum-like swing of radius bar *G;* if the reverse lever is placed in forward gear, drawing the reverse bar to the left, yoke *Y* will be inclined at an angle with pin *H* to the left of its position as shown in the cut; then, as a forward motion is imparted to the transmission bar, the lower end of radius bar *G* will swing to the right with a rising motion, swinging back on the return to the left with a fall; if the reverse lever should be placed in back gear, inclining yoke *Y* to the right, a forward movement of the transmission bar will cause pin *P* of the radius bar to swing to the right with a *downward motion*, and with a *rising one* on its return swing to the left; now note that any up or down movement of connection *P* means *a corresponding up or down deflection of the forward portion of the transmission bar R.*

Another bell crank is fulcrumed by the pin *T*, and its lower arm is connected with the valve rod by pin *Q;* link *M* connects its upper arm at pin *N* with the transmission bar at pin *L*. It should be plain, now, that a rising movement of the forward portion of the transmission bar will drive the valve forward, and a falling movement will pull the valve backward, and that the forward-and-back travel of the valve is secured

from the up-and-down glide of pin *P* when yoke *Y* is inclined at an angle with the vertical; and to reverse the engine, it is only necessary to reverse the direction of inclination of yoke *Y;* or to shorten the cut-off, to raise the yoke toward the mid position as it is shown in the cut.

As to the necessary advance of the valve to equal the lap and lead: with the engine standing as in Fig. 48, it will be observed that the eccentric is at its extreme backward position, and if the reverse lever should be placed in full gear—either forward or back—the valve would occupy the position of its farthest traverse, either front or back, that would not be affected by combination lever *E* at all during the reversion, for there is a straight line of motion at this time from eccentric to pin *L;* also, if the crosshead link should be disconnected and combination lever *E* rigidly secured in the vertical position shown in the cut, as the wheels revolved the eccentric would give a motion to the valve scarcely affected by the connection at pin *C*, which would merely act as a swinging support to the eccentric rod and transmission bar. The motion received from the crosshead affects the valve, then, only when the piston and main pin are at the beginning of a stroke; the eccentric and pin *C* are then at the upper or lower middle of their paths of revolution, and with radius bar *G* paralleling the yoke *Y*, the valve would be in

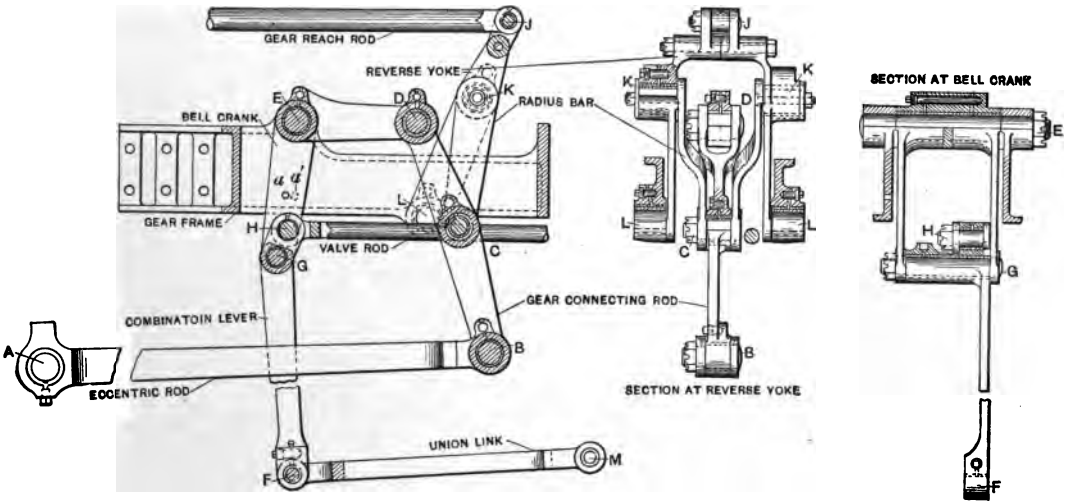

FIG. 49.—Baker–Pilliod Improved Valve Gear. Outside Admission.

a centred position with both admission ports covered if it were not for the distort effected at that time by the raised or lowered position of pin *C*, which, in raising or lowering the transmission bar *R*, shifts the angles of the bell crank *X*, and the latter—through connection with the valve rod at pin *Q*—moves the valve a distance equal to its steam lap plus the desired lead.

When this style of gear is used with inside-admission valves, the eccentric follows the main crank-pin—that is, it is located 180° from the position shown in Fig. 48; and the bell crank *E* is reversed in position, with the short, upper arm extending *forward*, link *D* connecting with the eccentric rod and transmission bar *ahead* of the combination lever.

The Improved Baker-Pilliod Valve Gear.—In the improved style of the Baker-Pilliod Valve Gear the reverse yoke with its radius bar, and the bell crank through which the motion of the eccentric rod is transformed to give the valve its "long" travel, is used just the same as in the original design, but there the similarity ends. Fig. 49 represents an arrangement of the improved gear for outside-admission valves, in which it is seen that the motion of the eccentric rod is transmitted to the gear-connecting rod which, after receiving the directing influence of the swinging radius bar, exerts an up-and-down motion to the upper arm of

the bell crank and a forth-and-back motion to pin *G* at the extremity of the lower arm. If the valve rod was connected with pin *G*, the valve would travel at exactly one-fourth of a cycle of motion from the piston; so, to give the valve the advance motion required to overcome the steam lap and open the admission port for lead, the combination lever is connected with the bell crank at pin *G*, and the valve rod is connected with pin *H* at the upper end of the combination lever. The combination lever receives its motion from the crosshead, and its distorting effect on the motion received from the eccentric is quite the same as in the Walschaert gear.

To any one who has followed the explanation of the original Baker-Pilliod gear, it will be unnecessary to further describe the improved motion. Fig. 50 represents its adaptation to inside-admission valves; the upper arm of the bell crank is in reverse to the position shown in the preceding cut, and the valve rod joins the combination lever at a point *beneath* the connection of the combination lever with the bell crank.

In the improved gear no loose oil cups are employed; each bearing has an oil reservoir which is integral with the part. All bearings, pins, and bolts are exposed to view and easily gotten at; three pins, or two pins and a bolt, remove the hardest piece to take down. The heaviest piece, the bell crank, weighs but 86 pounds.

Except in extraordinary cases, all equipments of this gear are exactly alike for outside admission, no matter what the class or type of engine; and the same is true for inside admission. Further, the yokes and radius bars are the same for both admissions. The combination lever would have to suit the requirements as to lap, lead, and the stroke of the piston. All parts are interchangeable, and the castings—including the gear frame—are the same for both sides of the engine, excepting the gear-connecting rods; the combination levers are rights and lefts, but they are forged. The gear frame is one piece of cast steel and can be used on either side of the engine without refitting; one type for inside admission, and another for outside admission. The gear frame is designed with an extension, so that it can be applied to a variety of engines, thus reducing the number of kinds of frame that a road must carry in stock. Hence, if an engine with this gear meets with an accident it is a short job to repair the gear and put the engine in service again.

Valve Events in General.—The Baker-Pilliod improved valve gear gives a constant lead of the valve the distance of the steam lap, but a variable preadmission; at full gear we get practically no preadmission, but as the cut-off is shortened preadmission begins and increases until there is ample for high speeds, with no bad effects for the slow-speed, full gear position. The man-

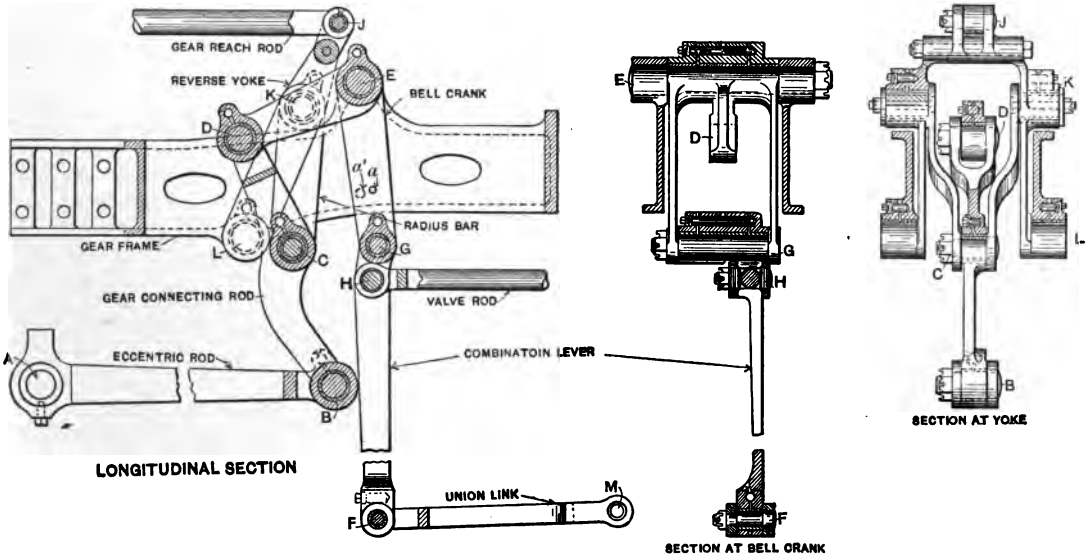

FIG. 50.—Baker-Pilliod Improved Valve Gear. Inside Admission.

ufacturers direct particular attention to the squareness of the cut-off, in back-up gear as well as the go-ahead. And they claim the longest release for given cut-off and lap condition of any locomotive valve gear in practical use to-day.

Whenever certain persons who are familiar with the "Stephenson" link motion are brought into association with a modern, *radial* valve-gear their first inquiry usually is as to the directions for "*valve setting*"; they cannot get clear of the idea that every valve motion requires constant tinkering with "to keep it square." All engines with radial gear should have adjustable valve stems, however. Before the gear is taken apart, tram the valve rod and the reach rod; put them back in the same place, test the lead and cut-off in one position of the reverse lever, equalizing the travel of the valve—if this should be necessary—by adjusting the valve stem, and the engine is ready for the road.

QUESTIONS AND ANSWERS ON BREAKDOWNS AND THEIR REMEDIES ON THE ROAD

(with the Baker-Pilliod Improved Valve Gear)

Question 1.—In case of breakdown with the engine disabled on one side, how may the valve be blocked centrally on its seat so as to cover all ports—is it necessary in the use of this gear, to carry a valve-stem clamp for the purpose?

Answer.—It is not necessary to carry a valve-stem clamp on an engine with the Baker-Pilliod improved valve gear. The valve-stem crosshead is provided with a set-screw by which it can be clamped to its guide, after the valve has been centred; and it holds the valve immovable.

Q. 2.—In case the eccentric crank or eccentric rod should break, what should be done?

A.—When the gear was first erected, after the valves had been set the reverse lever was placed in mid-gear and a hole drilled through the gear frame and bell-crank arm (see *a* and *a′*, Figs. 49 and 50). You now remove the broken parts—if a broken eccentric crank remove the eccentric rod, of course; move the bell crank until holes *a* and *a′* are in register, insert a bolt through

the holes, and you are ready to go. With the gear bolted in this manner the valve will get the lap-and-lead movement, and will permit a port opening equal to the lead for all cut-offs, from the motion received through the combination lever from the crosshead.

Q. 3.—With what other breaks should the bell crank be bolted to the frame and the valve be able to receive its lap-and-lead movement, as directed above?

A.—In cases of breakages of the gear-connecting rod, radius bars, reverse yoke, short reach-rod, or horizontal arm of bell crank, remove the eccentric rod, and the lower arm of the bell crank can be bolted to the gear frame; and as previously stated, the engine will not have entirely failed on that side, the lap-and-lead movement of the valve supplying enough steam to the cylinder to give a certain amount of turning effort to the main pin.

Q. 4.—What should be done where the union link or crosshead arm has failed?

A.—In such cases it will be necessary to block the valve over the ports, by tightening the set-screw that clamps the valve stem to its guide, and to disconnect the valve rod, proceeding with the engine working on one side. Or, if it is possible to do so, chain the lower end of the combination lever in the position in which its pin hole *F* will be on the same vertical line as the fulcrum pin *E* of the bell crank; it will not then be

necessary to disconnect the valve stem nor to clamp the valve; the valve will get the eccentric movement, but the port opening will be reduced and be closed in any cut-off shorter than about 50%.

Q. 5.—Suppose the combination lever breaks very close up to the bell crank, how should one arrange?

A.—In that case remove the union link and the broken piece of the combination lever, secure the valve over the ports as has been described, disconnect the valve rod and tie up the loose parts to keep them from doing damage. Proceed under power of the other side of the engine.

Q. 6.—If the valve rod should break, what should be done?

A.—Block the valve by tightening the set-screw on the valve-stem crosshead as already understood, and either disconnect the broken valve rod from the combination lever, or tie it up in such a manner that it can swing to the motion of the combination lever without striking anything, and go on with the engine working on one side.

Q. 7.—If the vertical arms of the bell crank should get broken, what would be the best thing to do?

A.—The valve rod should be disconnected from the combination lever, and as the latter is carried by the vertical arms of the bell crank, the union link and combination lever must be taken down; the valve should

be centred and secured in the prescribed way, and you can then proceed—on one side.

Q. 8.—In these cases of failure of certain parts of the gear such as the eccentric rod or union link, etc., what are the advantages in being able to still secure the short movement of the valve and a limited port opening when the piston is at the beginning of its stroke?

A.—On the big up-to-date engines it is impractical to try to remove the main rod in cases of breakdowns, and when it is left up and the valve is blocked at the centre of its travel, the piston will meet with high resistance toward the finish of either stroke, on account of the air compression ahead of the piston and a partial vacuum behind it; this added to the braking power at applications of the air brake may cause the drivers to slide and flatten. The port opening provided as referred to, gives relief from this effect; further, it permits oil from the lubricator to reach the cylinder and prevent the walls from becoming dry and being cut by the piston—a condition that must be particularly guarded against when the main rod is left up, in cases of breakdowns.

INDEX

A

ACCESSIBILITY of Walschaert gear, 131, 132
Adaptability of Walschaert valve gear, 142, 143
Adjustment of Walschaert valve gear, 102
Advantages derived from the use of Walschaert gear, 129–148
Allan valve gear, and the Allen valve, 102
Analysis of the Walschaert gear, 11–92

B

BAKER-PILLIOD improved valve gear, 228
    Advantages in securing the short travel of the valve on disabled side of engine, 236
    Combination lever, if broken short, how arrange, 235
    Eccentric crank or eccentric rod, if broken, what should be done, 233
    Engine disabled on one side, how to block the valve, 233
    Other breaks requiring bolting bell crank to frame, 234
    Questions and Answers on break-downs, 233 to 236
    Valve events in general, 230 to 232 inclusive
    Valve rod, if broken, how repaired on the road, 235
    Vertical arms of bell crank, if broken, what is best to do, 235
    Union link or crosshead arm failure, what to do, 234
Baker-Pilliod valve gear, 222 to 236 inclusive
    Original style with outside admission, 224
    With inside admission, 228
Baldwin engine with Walschaert gear, 65 to 67 inclusive
Belgian engine with Walschaert valve motion, 80 to 87 inclusive
Bent piston rod in connection with preceding accident—should main rod be left in place? 182, 183
"Blocking the valve"—what is meant, and how it is done, 171 to 174 inclusive

Breakage of lower section of combination lever, or its link to the crosshead, 180
Break-downs on the road. Difference in methods of disconnection of Walschaert and Stephenson gears, 170, 171
Broken radius-rod hanger, 178, 179
Broken valve-stem, 179, 180
Building up the Walschaert gear: The start, 28
Built-up Walschaert gear complete, 42

C

CASE of broken or detached piston—what to do, 182
Checking dimensions of the gear, 98 to 100 inclusive
Combination lever, 29
Combination lever (*lap and lead lever*) for inside admission valves, 196
Combination lever (*lap and lead lever*)—to determine proper proportions of: for outside admission valves, 195
Comparative weights of Walschaert and Stephenson valve gears, 133 to 138 inclusive
Confusing in the meaning of lead, 158
Connections of the eccentric rod, 43
Constant lead with reverse lever in any notch, 38
Continuing the layout of the gear, and formulas, 105 to 109 inclusive
Correcting the built-up motion, 40, 41
Correction of one error introducing others, and their relief, 167
Could a broken side rod totally disable an engine with Stephenson valve motion? In cases of break-down requiring valve blocking should valve-stem of the Walschaert gear be disconnected? 175
"Cut-off," meaning of, 160

D

DE GLEHN compound engine with Walschaert gear, 67 to 69 inclusive
Derivation of lead through the Walschaert combination lever, 157

Designing and erecting the Walschaert valve gear, 95–126
Designing the Walschaert gear, and explanation of diagrams, 104, 105
Details of the Walschaert link, 44 to 49 inclusive
Difference between Walschaert and Stephenson motions, 151, 152
Difference in set-up of Walschaert gear as between inside and outside admission valves, 62 to 64 inclusive
Different methods of erection, 49 to 51 inclusive
Different styles of set-up of the gear, 19
Directness of Walschaert motion, 138, 139
Direct valve motion, 20
Disconnection of radius rod. Method of doing it, 176, 177
Disconnection of Walschaert and Stephenson gears, 170, 171
Does lost motion in the driving-boxes induce greater error in the Walschaert gear than in the Stephenson motion? Does the vertical motion of the engine affect the steam distribution in the Stephenson gear? 164
Does the radius rod give motion to the valve, with reverse lever on the centre? 160, 161
Does the rise and fall of the engine on springs affect the valve's action with Walschaert gear? Position of valve with crosshead in the centre of guides and reverse lever in centre notch of quadrant, 165

E

ECCENTRIC rod broken. How to proceed, 179
Eccentric-rod connections, 43
Eccentric rod, testing for length of, 192 to 194 inclusive
Effect of broken side rod on engine with Walschaert gear, 174
Effects from lead, 154
Effect of valve advance to secure lead, 25
Engine standing as last mentioned, if valve is not exactly centred, the cause and remedy, 166
Enumerating the chief advantages of Walschaert gear, 129 to 131 inclusive
Equalized cut-off, Walschaert *vs.* Stephenson gear, 161, 162
Erected gear, inspection of, 101
Erecting and designing the Walschaert valve gear, 95–126

Erection, different methods of, 49–51
Evolution of valve motion, 11

F

FORMULAS for lay-out of the gear, 105–109

G

GEAR, reversing, 37–39
General effects of lead, 143–148
General notes for adjusting Walschaert valve gear, 111 to 113 inclusive

H

HACKWORTH valve gear, 198 to 204 inclusive
Heating of driving-boxes prevented by adoption of Walschaert gear, 141
Heaviest engine, and fastest engine, have Walschaert gear, 67 to 69 inclusive
Heaviest switching engine (decapod) with Walschaert gear, 75
Helmholtz modification of Walschaert's gear, 113, 114
Heusinger Von Waldegg's modification of Walschaert gear, 92
Hobart-Allfree cylinders, valves and valve gear, 204 to 222
- Bell crank, how fixed when broken, 220
- Broken combination lever, how to provide for getting along with, 220
- Chart showing valve events, 215
- Compression-valve rod, breakage of, 217
- Cylinders and valves, 204 to 212
- Eccentric rod or eccentric crank failure, how to overcome trouble, 219
- If radius bar fails, what to do, 222
- Main valve-rod, breakage of, 217
- Questions and answers on break-downs, 217 to 222
- Reach rod, reach-rod arm, or reverse shaft, if broken what to do, 218
- Reverse link or reverse arm, what to do if broken, 218
- The valve gear, 212 to 216

Hobbart-Allfree, Transmission bar failure, what to do, 219
With crosshead link broken, how to proceed, 220
"Hooking-up," meaning of, 160
How to get along with broken valve stem, 179, 180
How to proceed with Walschaert eccentric rod broken, 179
How Walschaert eccentric rod can be changed in length, 167, 168

I

IF lead is not desired could the combination lever be dispensed with? Confusion in the meaning of lead, 158
Indirect valve motion, 26
Inside *vs.* outside admission valve, 16
Inspection of the erected gear, 101
Instructions for using cardboard valve models on the folder diagrams, 119 to 121 inclusive
Introducing cut-off, 33
Invention of Walschaert valve gear, 12
Is increase of lead desired? Does the established amount of lead vary in the Walschaert gear? Advance of the valve for other purposes besides securing lead. Is lead necessary? 156

K

KIND of eccentric used with Walschaert and Stephenson valve gears. How the Walschaert motion is reversed, 152

L

LAP and lead, changing the, 194
Lap and lead; cut-off, 17, 18
Lap and lead with Walschaert gear, 30 to 32 inclusive
Location of suspension of the Walschaert link, and carriage of the valve-stem slide, 169, 170
Location of suspension of Walschaert link, 76 to 80 inclusive
Location of Walschaert eccentric in relation to crank-pin. Is the Walschaert gear of direct or indirect motion? Changed to either by the shifting of the reverse lever, 159
Long's diagram of valve events, 109 to 111 inclusive

L. S. & M. S. Ry. engine with Walschaert gear—heaviest passenger engine, 73, 74

M

MALLET articulated compound engine, 62 to 64 inclusive
Mason's early design of Walschaert gear, 53 to 57 inclusive
Meaning of "cut-off" and "hooking-up," 160
Meaning of the term, "valve motion." From where the valve gear receives its initial motion. Kind, or style of valve used with Walschaert gear. Difference between Walschaert and Stephenson motions, 151, 152
Meaning of "working quarter" of the crank-pin, 165, 166
Medal awarded Walschaert, 14
Method of disconnection, etc., with a broken main rod, 181, 182
Method of disconnection of radius rod, 176, 177
Motor car with Walschaert valve gear, 67

N

NATIVITY of Egide Walschaerts, the inventor, 13

O

OPPORTUNITY for rigid frame bracing in the use of Walschaert gear, 140
Outside *vs.* inside admission valves in connection with Walschaert gear, 57 to 60 inclusive

P

PERMANENCE of adjustment of the Walschaert gear, 139, 140
Permanency of adjustment of Walschaert eccentric. When necessary to correct its length, 168
Permanency of the Walschaert gear, 52
Piston and D-slide valves, 17
Piston, broken, or detached, 182
Position of valve in relation to piston. What is meant by "lead," 153
Preliminary suggestions, 95 to 98 inclusive

Q

QUESTIONS and answers on Walschaert valve gear, 151–185

R

RADIAL valve gears other than the Walschaert, 198 to 236 inclusive
Radius rod, 35, 36
Radius rod suspension, 65
Radius rod, testing for length of, 191
Reauleaux and Zeuner diagrams, 114–119
Reasons for Walschaert link curving in opposite direction to the curve of the Stephenson link. Impossibility of changing the adjustment, or experimenting, with the Walschaert gear, 162
Relation of eccentrics to crank-pin, 21 to 25 inclusive
Relative positions of reverse lever and radius rod, 161
Reversing gear, 37–39

S

SECURING lead, 27
Securing lead with Stephenson eccentrics. Securing lead with Walschaert motion. Does the amount of lead remain constant in the Stephenson motion? 155
Setting valves with Walschaert gear, 189 to 197 inclusive
Set-up of the gear—different styles, 19
Simple comparative test of Walschaert and Stephenson valve gears, 148
Squaring the valve: by shortening or lengthening the valve stem, 197
Suggestions as to certain dimensions and proportions of the Walschaert gear, 103

T

TEST of Walschaert and Stephenson valve gears, 148
The Allan valve gear, and the Allen valve, 102
The built-up Walschaert gear complete, 42
The combination lever, 29
The dead center, to locate crankpin on, 192, 193

The general effects of lead, 143 to 148 inclusive
The radius rod, 35, 36
The Reauleaux and Zeuner diagrams, 114 to 119 inclusive
The reversing gear, 37 to 39 inclusive
The several effects from lead. Use of a compression instead of lead, 154
The valve, 15
The Walschaert link, 34
Theory of the combination lever, 96, 97

U

Use of Walschaert gear indicated on engines with crank-axles, 141, 142

V

Valve gears of De Glehn compound, 69 to 73 inclusive
Valve gears, the three general types of, 198
Valve models, instruction for using, 119-121
Valve motion, indirect, 26
Valve, the, 15
Variations in the angle between eccentric and crank-pin, 121 to 126 inclusive

W

Walschaert eccentric rod changed in length, 167, 168
Walschaert eccentric rod may be changed in length. Other parts of the gear. Does any particular part of the Walschaert gear have a tendency toward heating? 163
Walschaert gear adjustment, 102
Walschaert gear, Helmholtz modification of, 113, 114
Walschaert gear, Mason's early design, 53–57
Walschaert gear unaffected by side-rod breakage, 84
Walschaert gear with piston valves, 60 to 62 inclusive
Walschaert link, 34
Walschaert link, details of, 44–49
Walschaert link, details of link, *Frontispiece*
Walschaert locomotive valve gear, names of parts, *Frontispiece*

Walschaert motion, reversed, 152
Walschaert valve gear, model of, 199
Walschaert's original design of valve gear, 87 to 92 inclusive
Walschaert's patent, 14
What is meant by "lead," 153
What parts of the Walschaert gear should be kept especially free from lost motion? 163, 164
What to do in case of blown-out front cylinder head, 183, 184
What to do in the case of broken radius rod, 178
Where links between crosshead and combination lever are broken and lost from both sides of engine, how to determine the correct length for new ones, 184
"Working quarter" of the crank-pin, meaning of, 165, 166

Z

ZEUNER and Reauleaux diagrams, 114–119

1920

REVISED

CATALOGUE

of LATEST *and* BEST

Practical and Mechanical Books

Including Automobile and Aviation Books

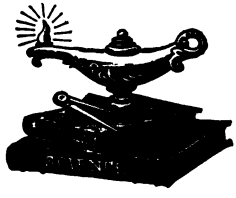

PRACTICAL BOOKS FOR PRACTICAL MEN

Any of these books will be sent prepaid to any part of the world, on receipt of price. Remit by Draft, Postal Order, Express Order or Registered Letter.

Published and For Sale by

The Norman W. Henley Publishing Co.

2 West 45th Street New York, U. S. A.

INDEX TO SUBJECTS

Accidents 27
Air Brake 25, 26
Arithmetic 15, 29, 38
Automobiles 3, 4, 5, 6, 7
Automobile Charts 7
Aviation 8
Batteries 18
Bevel Gears 22
Brazing and Soldering. 9
Cams 22
Charts 7, 8, 9
Chemistry 21
Civil Engineering 29
Coke 10
Compressed Air 10
Concrete 10, 11, 12, 13
Cosmetics 34
Dictionaries 14
Dies—Metal Work ..13, 14
Drawing—Sketching Paper 14, 15
Electric Bells 16
Electricity..15, 16, 17, 18, 19

Encyclopedia 29
Factory Management, etc. 19
Ford Automobile 6
Fuel 20
Flying Machines 8
Gas Engines and Gas, 20, 21, 22
Gearing and Cams 22
Hydraulics 22
Ice and Refrigeration.. 22
Inventions—Patents ... 23
Knots 23
Lathe Work 23, 24
Link Motion 25
Liquid Air 24
Locomotive Engineering, 24, 25, 26, 27
Machine Shop Practice, 27, 29, 30, 31
Manual Training 32
Marine Engineering ... 32
Mechanical Magazine .. 28
Mechanical Movements. 30
Metal Turning 23
Metal Work Dies 13, 14
Mining 33
Motor Cycles 6, 7
Patents and Inventions. 23
Pattern Making 33
Perfumery 34
Plumbing 34
Receipt Book 35, 40
Refrigeration and Ice.. 22
Repairing Automobiles.. 6
Rubber 36
Saws 36
Screw Cutting 36
Sheet Metal Work ...13, 14
Smoke Prevention 20
Soldering 9
Starting Systems 5
Steam Engineering.36, 37, 38
Steam Heating and Ventilation 38
Steel 38, 39
Storage Batteries 18
Switch Boards 17, 19
Tractor 22, 39
Turbines 39
Ventilation 38
Waterproofing 13
Welding 5
Wiring 17, 18
Wireless Telephones .. 19

☞ Any of these books will be sent prepaid to any part of the world, on receipt of price.

REMIT by Draft, Postal Money Order, Express Money Order, or by Registered Mail.

GOOD, USEFUL BOOKS

AUTOMOBILES—MOTORCYCLES

The Modern Gasoline Automobile, Its Design, Construction, Operation.

By VICTOR W. PAGÉ, M.S.A.E. This is the most complete, practical, and up-to-date treatise on gasoline automobiles and their component parts ever published. In the new revised and enlarged 1920 edition, all phases of automobile construction, operation and maintenance are fully and completely described and in language anyone can understand. Every part of all types of automobiles, from light cyclecars to heavy motor trucks and tractors, are described in a thorough manner; not only the automobile, but every item of its equipment, accessories, tools needed, supplies and spare parts necessary for its upkeep, are fully discussed. It is clearly and concisely written by an expert familiar with every branch of the automobile industry and the originator of the practical system of self-education on technical subjects; it is a liberal education in the automobile art, useful to all who motor for either business or pleasure. Anyone reading the incomparable treatise is in touch with all improvements that have been made in motor car construction. All latest developments, such as high speed aluminum motors and multiple valve and sleeve valve engines, are considered in detail. The latest ignition, carburetor and lubrication practice is outlined. New forms of change speed gears, and final power transmission systems, and all latest chassis improvements, are shown and described. This book is used as a text in all leading automobile schools, and is conceded to be the standard treatise. The chapter on Starting and Lighting Systems has been greatly enlarged, and many automobile engineering features that have long puzzled laymen are explained so clearly that the underlying principles can be understood by anyone. This book was first published six years ago, and so much new matter has been added to the book that it is nearly twice its original size. The only treatise covering various forms of war automobiles and recent developments in motor truck design, as well as pleasure cars. This book is not too technical for the layman nor too elementary for the more expert. It is an incomparable work of reference for home or school. 6 x 9. Cloth, 1,000 pages, nearly 1,000 illustrations, 12 folding plates.

Price, $4.00

Questions and Answers Relating to Modern Automobile Construction, Driving and Repair.

By VICTOR W. PAGÉ. A self-educator on automobiling without an equal. This practical treatise consists of a series of thirty-seven lessons, covering with over 2,000 questions and their answers—the automobile, its construction, operation and repair. The subject matter is absolutely correct and explained in simple language. If you can't answer all of the following questions, you need this work. The answers to these and 2,000 more are to be found in its pages.

Give the name of all important parts of an automobile and describe their functions. Describe action of latest types of kerosene carburetors. What is the difference between a "double" ignition system and a "dual" ignition system? Name parts of an induction coil. How are valves timed? What is an electric motor starter and how does it work? What are advantages of worm drive gearing? Name all important types of ball and roller bearings. What is a "three-quarter" floating axle? What is a two-speed axle? What is the Vulcan electric gear shift? Name the causes of lost power in automobiles. Describe all noises due to deranged mechanism and give causes. How can you adjust a carburetor by the color of the exhaust gases? What causes "popping" in the carburetor? What tools and supplies are needed to equip a car? How do you drive various makes of cars? What is a differential lock and where is it used? Name different systems of wire wheel construction. What is a "positive" drive differential? etc., etc. Answers every question asked relating to the modern automobile. A popular work at a popular price. 5¼ x 7½. Cloth, 650 pages, 392 illustrations, 3 folding plates. 1920 Edition just published. **Price, $2.50**

How to Run an Automobile.

By VICTOR W. PAGÉ. This treatise gives concise instructions for starting and running all makes of gasoline automobiles, how to care for them, and gives distinctive features of control. Describes every step for shifting gears, controlling engine, etc. Among the chapters contained are: I. Automobile Parts and Their Functions. II. General Starting and Driving Instructions. III. Typical 1919 Control Systems—Care of Automobiles. Thoroughly illustrated. 178 pages, 72 illustrations. **Price, $1.50**

The Automobilist's Pocket Companion and Expense Record.

By VICTOR W. PAGÉ. This book is not only valuable as a convenient cost record, but contains much information of value to motorists. Includes a condensed digest of auto laws of all States, a lubrication schedule, hints for care of storage battery and care of tires, location of road troubles, anti-freezing solutions, horsepower table, driving hints and many useful tables and recipes of interest to all motorists. Not a technical book in any sense of the word, just a collection of practical facts in simple language for the everyday motorist. Convenient pocket size. **Price, $1.25**

Gasoline and Kerosene Carburetors, Construction, Installation and Adjustment.

By Capt. V. W. Pagé. All leading types of carburetors are described in detail, special attention being given to the forms devised to use the cheaper fuels such as kerosene. Carburetion troubles, fuel system troubles, carburetor repairs and installation, electric primers and economizers, hot spot manifolds and all modern carburetor developments are considered in a thorough manner. Methods of adjusting all types of carburetors are fully discussed as well as suggestions for securing maximum fuel economy and obtaining highest engine power. 250 pages, 89 illustrations. **Price, $2.00**

Starting, Lighting and Ignition Systems.

By Victor W. Pagé. A practical treatise on latest automobile starting, lighting and ignition system practice. This practical volume has been written with special reference to the requirements of the reader desiring easily understood explanatory matter relating to all types of automobile electrical systems. It can be understood by anyone, even without electrical knowledge, because elementary electrical principles are considered before any attempt is made to discuss features of the various systems. These basic principles are clearly stated and illustrated with simple diagrams. All the leading systems of starting, lighting and ignition have been described and illustrated with the cooperation of the experts employed by the manufacturers. Over 200 wiring diagrams are shown in both technical and nontechnical forms. Complete data is given for locating troubles in all systems, the various steps being considered in a logical way for those without expert electrical knowledge. All ignition systems receive full consideration, starting with the simplest battery and coil forms found on early cars to the modern short-contact timer and magneto methods used with the latest eight and twelve-cylinder motors. Full directions are given for making all repairs and complete instructions for locating troubles with meters. This book is unusually complete, as it also includes descriptions of various accessories operated by electric current, such as electrical gear shifts, brake actuation, signaling devices, vulcanizers, etc. Over 700 pages. 425 specially made engravings. 1920 Edition, Revised and Enlarged. **Price, $3.00**

Automobile Welding with the Oxy-Acetylene Flame.

By M. Keith Dunham. Explains in a simple manner apparatus to be used, its care, and how to construct necessary shop equipment. Proceeds then to the actual welding of all automobile parts, in a manner understandable by everyone. *Gives principles never to be forgotten.* This book is of utmost value, since the perplexing problems arising when metal is heated to a melting point are fully explained and the proper methods to overcome them shown. 167 pages, fully illustrated. **Price, $1.50**

Automobile Repairing Made Easy.

By VICTOR W. PAGÉ. A thoroughly practical book containing complete directions for making repairs to all parts of the motor car mechanism. Written in a thorough but non-technical manner. Gives plans for workshop construction, suggestions for equipment, power needed, machinery and tools necessary to carry on business successfully. Tells how to overhaul and repair all parts of all automobiles. The information given is founded on practical experience, everything is explained so simply that motorists and students can acquire a full working knowledge of automobile repairing. Other works dealing with repairing cover only certain parts of the car—this work starts with the engine, then considers carburetion, ignition, cooling and lubrication systems. The clutch, change speed gearing and transmission system are considered in detail. Contains instructions for repairing all types of axles, steering gears and other chassis parts. Many tables, short cuts in figuring and rules of practice are given for the mechanic. Explains fully valve and magneto timing, "tuning" engines, systematic location of trouble, repair of ball and roller bearing, shop kinks, first aid to injured and a multitude of subjects of interest to all in the garage and repair business. All illustrations are especially made for this book, and are actual photographs or reproductions of engineering drawings. This book also contains Special Instructions on Electric Starting, Lighting and Ignition Systems, Tire Repairing and Rebuilding, Autogenous Welding, Brazing and Soldering, Heat Treatment of Steel, Latest Timing Practice, Eight and Twelve-Cylinder Motors, etc., etc. You will never "Get Stuck" on a Job if you own this book. 1,000 specially made engravings on 500 plates. 1,056 pages (5½ x 8). 1920 Edition. **Price, $4.00**

The Model T Ford Car, Its Construction, Operation and Repair, Including the Fordson Farm Tractor, F. A. Lighting and Starting System, Ford Motor Truck.

By VICTOR W. PAGÉ. This is the most complete and practical instruction book ever published on the Ford car and Fordson tractor. A high grade, cloth bound book, printed on the best paper, illustrated by specially made drawings and photographs. All parts of the Ford Model T car and Fordson tractor are described and illustrated in a comprehensive manner. The construction is fully treated and operating principle made clear to everyone. Complete instructions for driving and repairing are given. To the 1920 Revised Edition matter has been added on the Ford Truck and Tractor Conversion Sets and Genuine Fordson Tractor. All parts are described. All repair processes illustrated and fully explained. Written so all can understand—no theory, no guesswork. New Edition. 153 illustrations, 410 pages, 2 large folding plates. **Price, $2.00**

Motorcycles, Side Cars and Cyclecars, Their Construction, Management and Repair.

By VICTOR W. PAGÉ. Describes fully all leading types of machines, their design, construction, maintenance, operation and repair. 550 pages. 350 specially made illustrations. 5 folding plates. New Edition. **Price, $2.50**

Automobile Charts

By VICTOR W. PAGÉ, M.S.A.E.

THE POPULAR AUTOMOBILE SERIES
UNIFORM SIZE—24"x38"—PRICE 35 CENTS EACH

Location of Gasoline Engine Troubles Made Easy.

This chart shows clearly all parts of a typical four-cylinder gasoline engine of the four-cycle type. It simplifies location of all engine troubles. No details omitted. **Price, 35 cents**

Location of Carburetion Troubles Made Easy.

It shows clearly how to find carburetion troubles and names all defects liable to exist in the various parts. Instructions are given for carburetor adjustment. **Price, 35 cents**

Location of Ignition System Troubles Made Easy.

In this chart all parts of a typical double ignition system using battery and magneto current are shown, and suggestions are given for readily finding ignition troubles and eliminating them when found. **Price, 35 cents**

Location of Cooling and Lubricating Troubles.

This is a combination chart showing all components of the approved form of water cooling group as well as a modern engine lubrication system. It shows all points where defects exist that may result in engine overheating, both in cooling and oiling systems. **Price, 35 cents**

Lubrication of the Motor Car Chassis.

This chart presents the plan view of a typical six-cylinder chassis of standard design and outlines all important bearing points requiring lubrication, and is a valuable guide to the correct lubrication of any modern car. A practical chart for all interested in motor car maintenance. **Price, 35 cents**

While each chart is complete in itself, the set covers all maintenance instructions for the entire automobile. Sold singly. Securely wrapped.

Location of Starting and Lighting System Faults.

The most complete chart yet devised, showing all parts of the modern automobile starting, lig ting and ignition systems, giving instructions for systematic location of all faults in wiring, lamps, motor or generator, switches and all other units. Invaluable to motorists, chauffeurs and repairmen. Size 24 x 38 inches. **Price, 35 cents**

Location of Ford Engine Troubles Made Easy.

Chart showing clear sectional views depicting all portions of the Ford power plant and auxiliary groups. It outlines clearly all parts of the engine, fuel supply systems, ignition group and cooling system, that are apt to give trouble, detailing all derangements that are liable to make an engine lose power, start hard, or work irregularly. This chart simplifies location of all engine faults. Size 25 x 38 inches. **Price, 35 cents**

Location of Motorcycle Troubles Made Easy.

This chart simplifies location of all power-plant troubles and will prove of value to all who have to do with the operation, repair or sale of motorcycles. No details omitted. Size 30 x 20 inches. **Price, 35 cents**

AVIATION

A B C of Aviation.

By Capt. V. W. Pagé. This book describes the basic principles of aviation, tells how a balloon or dirigible is made and why it floats in the air. Describes how an airplane flies. It shows in detail the different parts of an airplane, what they are and what they do. Describes all types of airplanes and how they differ in construction; as well as detailing the advantages and disadvantages of different types of aircraft. It includes a complete dictionary of aviation terms and clear drawings of leading airplanes. The reader will find simple instructions for unpacking, setting up and rigging airplanes. A full description of airplane control principles is given and methods of flying are discussed at length.

This Book answers every question one can ask about modern aircraft, their construction and operation. A self educator on aviation without an equal. 275 pages, 130 specially made illustrations with 7 plates. **Price, $2.50**

Aviation Engines—Design; Construction; Repair.

By Lieut. Victor W. Pagé, Aviation Section, S.C.U.S.R. This treatise, written by a recognized authority on all of the practical aspects of internal combustion engine construction, maintenance and repair, fills the need as no other book does. The matter is logically arranged; all descriptive matter is simply expressed and copiously illustrated, so that anyone can understand airplane engine operation and repair even if without previous mechanical training. This work is invaluable for anyone desiring to become an aviator or aviation mechanician.

The latest rotary types, such as the Gnome Monosoupape, and LeRhone, are fully explained, as well as the recently developed Vee and radial types. The subjects of carburetion, ignition, cooling and lubrication also are covered in a thorough manner. The chapters on repair and maintenance are distinctive and found in no other book on this subject. Not a technical book, but a practical, easily understood work of reference for all interested in aeronautical science. 576 pages, 253 illustrations. **Price, Net, $3.00**

Glossary of Aviation Terms—English-French; French-English.

A complete glossary of practically all terms used in aviation, having lists in both French and English with equivalents in either language compiled by Lieuts. Victor W. Pagé, A.S., S.C.U.S.R., and Paul Montariol, of the French Flying Corps. **Price, Net, $1.00**

Aviation Chart—Location of Airplane Power Plant Troubles Made Easy.

By Lieut. Victor W. Pagé, A.S., S.C.U.S.R. A large chart outlining all parts of a typical airplane power plant, showing the points where trouble is apt to occur and suggesting remedies for the common defects. Intended especially for aviators and aviation mechanics on school and field duty. **Price, 35 cents**

BRAZING AND SOLDERING

Brazing and Soldering.

By James F. Hobart. The only book that shows you just how to handle any job of brazing or soldering that comes along; it tells you what mixture to use, how to make a furnace if you need one. Full of valuable kinks. The fifth edition of this book has just been published, and to it much new matter and a large number of tested formulas for all kinds of solders and fluxes have been added. **Price, 35c.**

CHARTS

Aviation Chart—Location of Airplane Power Plant Troubles Made Easy.

By Lieut. Victor W. Pagé, A.S., S.C.U.S.R. A large chart outlining all parts of a typical airplane power plant, showing the points where trouble is apt to occur and suggesting remedies for the common defects. Intended especially for aviators and aviation mechanics on school and field duty.

Price, 35 cents

Modern Submarine Chart—With 200 Parts Numbered and Named.

A cross-section view, showing clearly and distinctly all the interior of a submarine of the latest type. No details omitted—everything is accurate and to scale. This chart is really an encyclopedia of a submarine. **Price, 25 cents**

Box Car Chart.

A chart showing the anatomy of a box car, having every part of the car numbered and its proper name given in a reference list. **Price, 25 cents**

Gondola Car Chart.

A chart showing the anatomy of a gondola car, having every part of the car numbered and its proper reference name given in a reference list. **Price, 25 cents**

Passenger Car Chart.

A chart showing the anatomy of a passenger car, having every part of the car numbered and its proper name given in a reference list. **Price, 25 cents**

Steel Hopper Bottom Coal Car.

A chart showing the anatomy of a steel hopper bottom coal car, having every part of the car numbered and its proper name given in a reference list. **Price, 25 cents**

Tractive Power Chart.

A chart whereby you can find the tractive power or drawbar pull of any locomotive without making a figure. Shows what cylinders are equal, how driving wheels and steam pressure affect the power. What sized engine you need to exert a given drawbar pull or anything you desire in this line.

Price, 50 cents

Horse-power Chart.

Shows the horse-power of any stationary engine without calculation. No matter what the cylinder diameter of stroke, the steam pressure or cut-off, the revolutions, or whether condensing or non-condensing, it's all there. Easy to use, accurate and saves time and calculations. Especially useful to engineers and designers. **Price, 50 cents**

Boiler Room Chart.

By George L. Fowler. A chart—size 14 x 28 inches—showing in isometric perspective the mechanisms belonging in a modern boiler room. This chart is really a dictionary of the boiler room—the names of more than 200 parts being given.

Price, 25 cents

COKE

Coke—Modern Coking Practice, Including Analysis of Materials and Products.

By J. E. Christopher and T. H. Byrom. This, the standard work on the subject, has just been revised and is now issued in two volumes. It is a practical work for those engaged in Coke manufacture and the recovery of By-products. Fully illustrated with folding plates. It has been the aim of the authors, in preparing this book, to produce one which shall be of use and benefit to those who are associated with, or interested in, the modern developments of the industry. Among the chapters contained in Volume I are: Introduction; Classification of Fuels; Impurities of Coals; Coal Washing; Sampling and Valuation of Coals, etc.; Chlorific Power of Fuels; History of Coke Manufacture; Developments in Coke Oven Design; Recent Types of Coke Ovens; Mechanical Appliances at Coke Ovens; Chemical and Physical Examination of Coke. Volume II covers By-products. Each volume is fully illustrated, with folding plates.

Price, $3.00 per volume

COMPRESSED AIR

Compressed Air in all Its Applications.

By Gardner D. Hiscox. This is the most complete book on the subject of air that has ever been issued, and its thirty-five chapters include about every phase of the subject one can think of. It may be called an encyclopedia of compressed air. It is written by an expert, who, in its 665 pages, has dealt with the subject in a comprehensive manner, no phase of it being omitted. Over 500 illustrations. Fifth Edition, revised and enlarged. Cloth bound, **$6.00.** Half Morocco, revised and enlarged. Cloth bound. **Price, $6.00**

CONCRETE

Concrete Wall Forms.

By A. A. Houghton. A new automatic wall clamp, is illustrated with working drawings. Other types of wall forms, clamps, separators, etc., are also illustrated and explained.

Price, 75 cents

Concrete Floors and Sidewalks.

By A. A. Houghton. The molds for molding squares, hexagonal and many other styles of mosaic floor and sidewalk blocks are fully illustrated and explained. **Price, 75 cents**

Practical Concrete Silo Construction.

By A. A. Houghton. Complete working drawings and specifications are given for several styles of concrete silos, with illustrations of molds for monolithic and block silos. The tables, data, and information presented in this book are of the utmost value in planning and constructing all forms of concrete silos. **Price, 75 cents**

Molding Concrete Bath Tubs, Aquariums and Natatoriums.

By A. A. Houghton. Simple molds and instruction are given for molding different styles of concrete bath tubs, swimming pools, etc. **Price, 75 cents**

Molding Concrete Chimneys, Slate and Roof Tiles.

By A. A. Houghton. The manufacture of all types of concrete slate and roof tile is fully treated. Valuable data on all forms of reinforced concrete roofs are contained within its pages. The construction of concrete chimneys by block and monolithic systems is fully illustrated and described. A number of ornamental designs of chimney construction with molds are shown in this valuable treatise. **75 cents**

Molding and Curing Ornamental Concrete.

By A. A. Houghton. The proper proportions of cement and aggregates for various finishes, also the methods of thoroughly mixing and placing in the molds, are fully treated. An exhaustive treatise on this subject that every concrete worker will find of daily use and value. **Price, 75 cents**

Concrete Monuments, Mausoleums and Burial Vaults.

By A. A. Houghton. The molding of concrete monuments to imitate the most expensive cut stone is explained in this treatise, with working drawings of easily built molds. Cutting inscriptions and designs is also fully treated. **75 cents**

Concrete Bridges, Culverts and Sewers.

By A. A. Houghton. A number of ornamental concrete bridges with illustrations of molds are given. A collapsible center of core for bridges, culverts and sewers is fully illustrated with detailed instructions for building. **75 cents**

Constructing Concrete Porches.

By A. A. Houghton. A number of designs with working drawings of molds are fully explained so any one can easily construct different styles of ornamental concrete porches without the purchase of expensive molds. **Price, 75 cents**

Molding Concrete Flower Pots, Boxes, Jardinieres, Etc.

By A. A. Houghton. The molds for producing many original designs of flower pots, urns, flower boxes, jardinieres, etc., are fully illustrated and explained, so the worker can easily construct and operate same. **Price, 75 cents**

Molding Concrete Fountains and Lawn Ornaments.

By A. A. Houghton. The molding of a number of designs of lawn seats, curbing, hitching posts, pergolas, sun dials and other forms of ornamental concrete, for the ornamentation of lawns and gardens, is fully illustrated and described. **75c.**

Concrete on the Farm and in the Shop.

By H. Colvin Campbell. This is a new book from cover to cover, illustrating and describing in plain, simple language many of the numerous appliances of concrete within the range of the home worker. Among the subjects treated are: Principles of reinforcing; methods of protecting concrete so as to insure proper hardening; home-made mixers; mixing by hand and machine; form construction, described and illustrated by drawings and photographs; construction of concrete walls and fences; concrete fence posts; concrete gate posts; corner posts; clothes line posts; grape arbor posts; tanks; troughs; cisterns: hog wallows; feeding floors and barnyard pavements; foundations; well curbs and platforms; indoor floors; sidewalks; steps; concrete hotbeds and cold frames; concrete slab roofs; walls for buildings; repairing leaks in tanks and cisterns; and all topics associated with these subjects as bearing upon securing the best results from concrete are dwelt upon at sufficient length in plain every-day English so that the inexperienced person desiring to undertake a piece of concrete construction can, by following the directions set forth in this book, secure 100 per cent success every time. A number of convenient and practical tables for estimating quantities, and some practical examples, are also given. 150 pages, 51 illustrations. **Price, $1.00**

Concrete From Sand Molds.

By A. A. Houghton. A practical work treating on a process which has heretofore been held as a trade secret by the few who possessed it, and which will successfully mold every and any class of ornamental concrete work. The process of molding concrete with sand molds is of the utmost practical value, possessing the manifold advantages of a low cost of molds, the ease and rapidity of operation, perfect details to all ornamental designs, density and increased strength of the concrete, perfect curing of the work without attention and the easy removal of the molds regardless of any undercutting the design may have. 192 pages. Fully illustrated. Cloth. **Price, $2.00**

Ornamental Concrete Without Molds.

By A. A. Houghton. The process for making ornamental concrete without molds has long been held as a secret, and now, for the first time, this process is given to the public. The book reveals the secret and is the only book published

which explains a simple, practical method whereby the concrete worker is enabled, by employing wood and metal templates of different designs, to mold or model in concrete any cornice, archivolt, column, pedestal, base cap, urn or pier in a monolithic form—right upon the job. These may be molded in units or blocks, and then built up to suit the specifications demanded. This work is fully illustrated, with detailed engravings. Cloth. **Price, $2.00**

Popular Handbook for Cement and Concrete Users.

By MYRON H. LEWIS. Everything of value to the concrete user is contained, including kinds of cement employed in construction, concrete architecture, inspection and testing, waterproofing, coloring and painting, rules tables, working and cost data. The book comprises thirty-three chapters. A valuable addition to the library of every cement and concrete user. Cloth, 430 pages, 126 illustrations. **Price, $3.00**

Waterproofing Concrete.

By MYRON H. LEWIS. Modern methods of waterproofing concrete and other structures. A condensed statement of the principles, rules and precautions to be observed in waterproofing and damp-proofing structures and structural materials. Paper binding. Illustrated. Second Edition. **75 cents**

DIES—METAL WORK

Dies; Their Construction and Use for the Modern Working of Sheet Metals.

By J. V. WOODWORTH. A new book by a practical man, for those who wish to know the latest practice in the working of sheet metals. It shows how dies are designed, made and used, and those who are engaged in this line of work can secure many valuable suggestions. Sixth revised edition. 525 illustrations, 394 pages. Cloth. **Price, $3.50**

Punches, Dies and Tools for Manufacturing in Presses.

By J. V. WOODWORTH. An encyclopedia of die-making, punch-making, die-sinking, sheet-metal working, and making of special tools, subpresses, devices and mechanical combinations for punching, cutting, bending, forming, piercing, drawing, compressing, and assembling sheet-metal parts and also articles of other materials in machine tools. This is a distinct work from the author's book entitled "Dies; Their Construction and Use." 500 pages, 700 engravings. Second edition. Cloth. **Price, $4.50**

Drop Forging, Die-Sinking and Machine-Forming of Steel.

By J. V. WOODWORTH. The processes of die-sinking and force-making, which are thoroughly described and illustrated in this admirable work, are rarely to be found explained in such a clear and concise manner as is here set forth. The process of die-sinking relates to the engraving or sinking

of the female or lower dies, such as are used for drop forgings, hot and cold machine forging, swedging and the press working of metals. The process of force-making relates to the engraving or raising of the male or upper dies used in producing the lower dies for the press-forming and machine-forging of duplicate parts of metal. The book contains eleven chapters, and the information contained in these chapters is just what will prove most valuable to the forged-metal worker. 304 detailed illustrations. 341 pages, cloth. **Price, $3.00**

DICTIONARIES

Aviation Terms—English-French; French-English.

A complete glossary of practically all terms used in aviation, having lists in both French and English with equivalents in either language. A very valuable book compiled by Lieuts. Victor W. Pagé and Paul Montariol. **Price, $1.00**

Standard Electrical Dictionary.

By Prof. T. O'Conor Sloane. Just issued an entirely new edition brought up to date and greatly enlarged—as a reference book this work is beyond comparison as it contains over 700 pages, nearly 500 illustrations, and definitions of about 6,000 distinct words, terms and phrases. The definitions are terse and concise and includes every term used in electrical science.

In its arrangement and typography the book is very convenient. The word or term defined is printed in black faced type which readily catches the eye, while the body of the page is in smaller but distinct type. The definitions are well worded, and so as to be understood by the non-technical reader. The general plan is to give an exact, concise definition, and then amplify and explain in a more popular way. Synonyms are also given, and references to other words and phrases are made. This work is absolutely indispensable to all in any way interested in electrical science, from the higher electrical expert to the everyday electrical workman. In fact, it should be in the possession of all who desire to keep abreast with the progress of this branch of science. 1920 enlarged edition. Nearly 800 pages and nearly 400 illustrations. **Price, $5.00**

DRAWING—SKETCHING PAPER

Linear Perspective Self-Taught.

By Herman T. C. Kraus. This work gives the theory and practice of linear perspective, as used in architectural, engineering and mechanical drawings. The arrangement of the book is good; the plate is on the left-hand, while the descriptive text follows on the opposite page, so as to be readily referred to. A self-explanatory linear perspective chart is included in the second revised edition. Cloth. **Price, $3.00**

Self-Taught Mechanical Drawing and Elementary Machine Design.

By F. L. SYLVESTER, M.E., Draftsman, with additions by Erik Oberg, associate editor of "Machinery." A practical elementary treatise on Mechanical Drawing and Machine Design, comprising the first principles of geometric and mechanical drawing, workshop mathematics, mechanics, strength of materials and the calculation and design of machine details, compiled for the use of practical mechanics and young draftsmen. 330 pages, 215 engravings, cloth. **Price, $2.50**

A New Sketching Paper.

A new specially ruled paper to enable you to make sketches or drawings in isometric perspective without any figuring or fussing. It is being used for shop details as well as for assembly drawings, as it makes one sketch do the work of three, and no workman can help seeing just what is wanted. Pads of 40 sheets, 6 x 9 inches, **Price, 25c.**; 9 x 12 inches, **Price, 50c.**; 12 x 18 inches, **Price, $1.00.**

Practical Perspective.

By RICHARDS and COLVIN. Shows just how to make all kinds of mechanical drawings in the only practical perspective isometric. Makes everything plain so that any mechanic can understand a sketch or drawing in this way. Saves time in the drawing room and mistakes in the shops. Contains practical examples of various classes of work. Third edition. Limp cloth. **Price, 75 cents**

ELECTRICITY

Arithmetic of Electricity.

By PROF. T. O'CONOR SLOANE. A practical treatise on electrical calculations of all kinds reduced to a series of rules, all of the simplest forms, and involving only ordinary arithmetic; each rule illustrated by one or more practical problems with detailed solution of each one. This book is classed among the most useful works published on the science of electricity, covering as it does the mathematics of electricity in a manner that will attract the attention of those who are not familiar with algebraical formulas. 200 pages. 1920 Revised and Enlarged edition. **Price, $1.50**

Dynamo Building for Amateurs, or How to Construct a Fifty Watt Dynamo.

By ARTHUR J. WEED. A practical treatise showing in detail the construction of a small dynamo or motor, the entire machine work of which can be done on a small foot lathe. Dimensioned working drawings are given for each piece of machine work, and each operation is clearly described. This machine, when used as a dynamo, has an output of fifty watts; when used as a motor it will drive a small drill press or lathe. It can be used to drive a sewing machine on any and all ordinary work. The book is illustrated with more than sixty original engravings showing the actual construction of the different parts. **Price, Cloth, $1.00**

Electric Bells.

By M. B. Sleeper. A complete treatise for the practical worker in installing, operating and testing bell circuits, burglar alarms, thermostats and other apparatus used with electric bells. Both the electrician and the experimenter will find in this book new material which is essential in their work. Tools, bells, batteries, unusual circuits, burglar alarms, annunciators, systems, thermostats, circuit breakers, time alarms, and other apparatus used in bell circuits are described from the standpoints of their application, construction, and repair. The detailed instructions for building the apparatus will appeal to the experimenter particularly. The practical worker will find the chapters on Wiring Calculation of Wire Sizes and Magnet Windings, Upkeep of Systems and the Location of Faults of the greatest value in their work. 124 pages. Fully illustrated. **Price, 75 cents.**

Commutator Construction

By Wm. Baxter, Jr. The business end of dynamo or motor of the direct current type is the commutator. This book goes into the designing, building and maintenance of commutators, shows how to locate troubles and how to remedy them; everyone who fusses with dynamos needs this. Fourth edition. **Price, 35 cents.**

Dynamos and Electric Motors and All About Them.

By Edward Trevert. This volume gives practical directions for building a two H. P. Dynamo of the Edison type capable of lighting about fifty mazda lamps of the 20 watt size. In addition, it gives directions for building two small electric motors suitable for running sewing machines. The concluding chapter describes the construction of a simple bichromate battery adapted for running electric motors. 96 pages. Fully illustrated with detail drawings. Cloth. **Price, $1.00.**

Construction of a Transatlantic Wireless Receiving Set.

By L. G. Pacent and T. S. Curtis. A work for the Radio student who desires to construct and operate apparatus that will permit of the reception of messages from the large stations in Europe with an aerial of amateur proportions. 36 pages. 23 illustrations, cloth. **Price, 35 cents.**

Electric Toy Making, Dynamo Building and Electric Motor Construction.

This work treats of the making at home of electrical toys, electrical apparatus, motors, dynamos and instruments in general and is designed to bring within the reach of young and old the manufacture of genuine and useful electrical appliances. 210 pages, cloth. Fully illustrated. Twentieth edition, enlarged. **Price, $1.50**

Experimental High Frequency Apparatus, How to Make and Use It.

By Thomas Stanley Curtis. 69 pages, illustrated. **Price, 50 cents.**

Electrician's Handy Book.

By Prof. T. O'Conor Sloane. This work has just been revised and much enlarged. It is intended for the practical electrician who has to make things go. The entire field of electricity is covered within its pages. It is a work of the most modern practice, written in a clear, comprehensive manner, and covers the subject thoroughly, beginning at the A B C of the subject, and gradually takes you to the more advanced branches of the science. It teaches you just what you should know about electricity. A practical work for the practical man. Contains forty-eight chapters.

The publishers consider themselves fortunate in having secured the services of such a well and favorably known writer as Prof. Sloane, who has with the greatest care completed a master work in concise form on this all important subject. 600 engravings, 840 pages, handsomely bound in cloth. 1920 Edition. **Price, $4.00**

Electricity Simplified.

By Prof. T. O'Conor Sloane. The object of 'Electricity Simplified" is to make the subject as plain as possible and to show what the modern conception of electricity is; to show how two plates of different metals immersed in acid can send a message around the globe; to explain how a bundle of copper wire rotated by a steam engine can be the agent in lighting our streets, to tell what the volt, ohm and ampere are, and what high and low tension mean; and to answer the questions that perpetually arise in the mind in this age of electricity. 172 pages. Illustrated. Thirteenth edition. Cloth. **Price, $1.50**

Electric Wiring, Diagrams and Switchboards.

By Newton Harrison, with additions by Thomas Poppe. This is the only complete work issued showing and telling you what you should know about direct and alternating current wiring. The work is free from advanced technicalities and mathematics, arithmetic being used throughout. It is in every respect a handy, well-written, instructive, comprehensive volume on wiring for the wireman, foreman, contractor or electrician. Third revised edition. 303 pages, 130 illustrations. Cloth. **Price, $2.50**

House Wiring.

By Thomas W. Poppe. Describing and illustrating up-to-date methods of installing electric light wiring. Contains just the information needed for successful wiring of a building. Fully illustrated with diagrams and plans. It solves all wiring problems and contains nothing that conflicts with the rulings of the National Board of Fire Underwriters. Third edition revised and enlarged. 125 pages, fully illustrated, flexible cloth. **Price, 75 cents**

High Frequency Apparatus, Its Construction and Practical Application.

By Thomas Stanley Curtis. The most comprehensive and thorough work on this interesting subject ever produced. The book is essentially practical in its treatment and it constitutes an accurate record of the researches of its author over a period of several years, during which time dozens of coils were built and experimented with. New revised and enlarged 1920 edition. 275 pages. **Price, $3.00**

How to Become a Successful Electrician.

By Prof. T. O'Conor Sloane. An interesting book from cover to cover. Telling in simplest language the surest and easiest way to become a successful electrician. The studies to be followed, methods of work, field of operation and the requirements of the successful electrician are pointed out and fully explained. 202 pages. Illustrated. Eighteenth revised edition. Cloth. **Price, $1.50**

Standard Electrical Dictionary.

By Prof. T. O'Conor Sloane. Just issued an entirely new edition brought up to date and greatly enlarged—as a reference book this work is beyond comparison as it contains over 700 pages, nearly 500 illustrations, and definitions of about 6,000 distinct words, terms and phrases. The definitions are terse and concise and includes every term used in electrical science.

In its arrangement and typography the book is very convenient. The word or term defined is printed in black faced type which readily catches the eye, while the body of the page is in smaller but distinct type. The definitions are well worded, and so as to be understood by the non-technical reader. The general plan is to give an exact, concise definition, and then amplify and explain in a more popular way. Synonyms are also given, and references to other words and phrases are made. This work is absolutely indispensable to all in any way interested in electrical science, from the higher electrical expert to the everyday electrical workman. In fact, it should be in the possession of all who desire to keep abreast with the progress of this branch of science. 1920 enlarged edition. Nearly 800 pages. 400 illustrations.

Price, $5.00

Storage Batteries Simplified.

By Victor W. Pagé, M.S.A.E. This is the most thorough and authoritative treatise ever published on this subject. It is written in easily understandable, non-technical language so that any one may grasp the basic principles of storage battery action as well as their practical industrial applications. All electric and gasoline automobiles use storage batteries. Every automobile repairman, dealer or salesman should have a good knowledge of maintenance and repair of these important elements of the motor car mechanism. This book not only tells how to charge, care for and rebuild storage batteries but also outlines all the industrial uses. Learn how they run street cars, locomotives and factory trucks. Get an understanding of the important functions they perform in submarine boats, isolated lighting plants, railway switch and signal systems, marine applications, etc. This book tells how they are used in central station standby service, for starting automobile motors and in ignition systems. Every practical use of the modern storage battery is outlined in this treatise. 208 pages, fully illustrated.

Price, $2.00

Wiring a House.

By Herbert Pratt. Shows a house already built; tells just how to start about wiring it; where to begin; what wire to use; how to run it according to insurance rules; in fact, just the information you need. Directions apply equally to a shop. Fourth edition. **Price, 35 cents**

Switchboards.

By WILLIAM BAXTER, JR. This book appeals to every engineer and electrician who wants to know the practical side of things. All sorts and conditions of dynamos, connections and circuits are shown by diagram and illustrate just how the switchboard should be connected. Includes direct and alternating current boards, also those for arc lighting, incandescent and power circuits. Special treatment on high voltage boards for power transmission. Second edition. 190 pages. Illustrated. **Price, $2.00**

Telephone Construction, Installation, Wiring, Operation and Maintenance.

By W. H. RADCLIFFE and H. C. CUSHING. This book gives the principles of construction and operation of both the Bell and Independent instruments; approved methods of installing and wiring them; the means of protecting them from lightning and abnormal currents; their connection together for operation as series or bridging stations; and rules for their inspection and maintenance. Line wiring and the wiring and operation of special telephone systems are also treated. 224 pages, 132 illustrations. Second revised edition. **Price, $1.50**

Wireless Telegraphy and Telephony Simply Explained.

By ALFRED P. MORGAN. This is undoubtedly one of the most complete and comprehensive treatises on the subject ever published, and a close study of its pages will enable one to master all the details of the wireless transmission of messages. The author has filled a long-felt want and has succeeded in furnishing a lucid, comprehensible explanation in simple language of the theory and practise of wireless telegraphy and telephony. Third edition. 154 pages, 156 engravings. **Price, $1.50**

Radio Time Signal Receiver.

By AUSTIN C. LESCARBOURA. This new book, "A Radio Time Signal Receiver," tells you how to build a simple outfit designed expressly for the beginner. You can build the outfits in your own workshop and install them for jewelers either on a one-payment or a rental basis. The apparatus is of such simple design that it may be made by the average amateur mechanic possessing a few ordinary tools. 42 pages. Paper. **Price, 35 cents**

Experimental Wireless Stations.

By P. E. EDELMAN. The theory, design, construction and operation is fully treated including Wireless Telephony, Vacuum Tube, and quenched spark systems. The new enlarged 1920 edition is just issued and is strictly up to date, correct and complete. This book tells how to make apparatus to not only hear all telephoned radio messages, but also how to make simple equipment that works for transmission over reasonably long distances. Then there is a host of new information included. The first and only book to give you all the recent important radio improvements, some of which have never before been published. 24 chapters. 167 illustrations. **Price, $2.50**

FUEL

Combustion of Coal and the Prevention of Smoke.

By Wm. M. Barr. This book has been prepared with special reference to the generation of heat by the combustion of the common fuels found in the United States, and deals particularly with the conditions necessary to the economic and smokeless combustion of bituminous coals in stationary and locomotive steam boilers. The presentation of this important subject is systematic and progressive. The arrangement of the book is in a series of practical questions, to which are appended accurate answers, which describe in language, free from technicalities, the several processes involved in the furnace combustion of American fuels; it clearly states the essential requisites for perfect combustion, and points out the best methods for furnace construction for obtaining the greatest quantity of heat from any given quality of coal. Nearly 350 pages, fully illustrated. Fifth edition.

Price, $1.50

Smoke Prevention and Fuel Economy.

By Booth and Kershaw. As the title indicates, this book of 197 pages and 75 illustrations deals with the problem of complete combustion, which it treats from the chemical and mechanical standpoints, besides pointing out the economical and humanitarian aspects of the question. **Price, $3.00**

GAS ENGINES AND GAS

Gas, Gasoline and Oil Engines.

By Gardner D. Hiscox. Revised by Victor W. Pagé. Just issued new, revised and enlarged edition. Every user of a gas engine needs this book. Simple, instructive and right up-to-date. The only complete work on the subject. Tells all about internal combustion engineering, treating exhaustively on the design, construction and practical application of all forms of gas, gasoline, kerosene and crude petroleum-oil engines. Describes minutely all auxiliary systems, such as lubrication, carburetion and ignition. Considers the theory and management of all forms of explosive motors for stationary and marine work, automobiles, aeroplanes and motorcycles. Includes also Producer Gas and Its Production. Invaluable instructions for all students, gas-engine owners, gas-engineers, patent experts, designers, mechanics, draftsmen and all having to do with the modern power. Illustrated by over 400 engravings, many specially made from engineering drawings, all in correct proportion. Nearly 700 octavo pages and 500 engravings. **Price, net, $3.00**

Gasoline Engines: Their Operation, Use and Care.

By A. Hyatt Verrill. A comprehensive, simple and practical work, treating of gasoline engines for stationary, marine or vehicle use; their construction, design, management, care, operation, repair, installation and troubles. A complete glossary of technical terms and an alphabetically arranged table of troubles and symptoms form a most valuable and unique feature of the book. 5¼ x 7½. Cloth. 275 pages, 152 illustrations. **Price, $2.00**

Gas Engine Construction.

Or How to Build a Half-Horse-power Gas Engine. By PARSELL and WEED. A practical treatise describing the theory and principles of the action of gas engines of various types, and the design and construction of a half-horse-power gas engine, with illustrations of the work in actual progress, together with dimensioned working drawings giving clearly the sizes of the various details. 300 pages. Third edition. Cloth. **Price, $3.00**

Chemistry of Gas Manufacture.

By H. M. ROYLES. This book covers points likely to arise in the ordinary course of the duties of the engineer or manager of a gas works not large enough to necessitate the employment of a separate chemical staff. It treats of the testing of the raw materials employed in the manufacture of illuminating coal gas and of the gas produced. The preparation of standard solutions is given as well as the chemical and physical examination of gas coal. 5¾ x 8¾. Cloth. 328 pages, 82 illustrations, 1 colored plate. **Price, $5.00**

Modern Gas Engines and Producer Gas Plants.

By R. E. MATHOT, M.E. A practical treatise of 320 pages, fully illustrated by 175 detailed illustrations, setting forth the principles of gas engines and producer design, the selection and installation of an engine, conditions of perfect operation, producer-gas engines and their possibilities, the care of gas engines and producer-gas plants, with a chapter on volatile hydrocarbon and oil engines. This book has been endorsed by Dugal Clerk as a most useful work for all interested in gas engine installation and producer gas. **$3.00**

The Gasoline Engine on the Farm: Its Operation, Repair and Uses.

By XENO W. PUTNAM. A useful and practical treatise on the modern gasoline and kerosene engine, its construction, management, repair and the many uses to which it can be applied in present-day farm life. It considers all the various household, shop and field uses of this up-to-date motor and includes chapters on engine installation, power transmission and the best arrangement of the power plant in reference to the work. 5¼ x 7½. Cloth. 527 pages, 179 illustrations. **Price, $3.00**

How to Run and Install Two- and Four-Cycle Marine, Gasoline Engines.

By C. VON CULIN. New revised and enlarged edition just issued. The object of this little book is to furnish a pocket instructor for the beginner, the busy man who uses an engine for pleasure or profit, but who does not have the time or inclination for a technical book, but simply to thoroughly understand how to properly operate, install and care for his own engine. The index refers to each trouble, remedy and subject alphabetically. Being a quick reference to find the cause, remedy and prevention for troubles, and to become an expert with his own engine. Pocket size. Paper binding. **Price, 25 cents**

Modern Gas Tractor, Its Construction, Utility, Operation and Repair.

By VICTOR W. PAGÉ. Treats exhaustively on the design and construction of farm tractors and tractor power-plants, and gives complete instructions on their care, operation and repair. All types and sizes of gasoline, kerosene and oil tractory are described, and every phase of traction engineering practice fully covered. Invaluable to all desiring reliable information on gas motor propelled traction engines and their use. Second edition revised by much additional matter. 5¼ x 7½. Cloth, 504 pages, 228 illustrations. 3 folding plates. **Price, $3.00**

GEARING AND CAMS

Bevel Gear Tables.

By D. AG. ENGSTROM. No one who has to do with bevel gears in any way should be without this book. The designer and draftsman will find it a great convenience, while to the machinist who turns up the blanks or cuts the teeth it is invaluable, as all needed dimensions are given and no fancy figuring need be done. Third edition. Cloth. **$1.50**

Change Gear Devices.

By OSCAR E. PERRIGO. A book for every designer, draftsman and mechanic who is interested in feed changes for any kind of machines. This shows what has been done and how. Gives plans, patents and all information that you need. Saves hunting through patent records and reinventing old ideas. A standard work of reference. Third edition. **$1.50**

Drafting of Cams.

By LOUIS ROUILLION. The laying out of cams is a serious problem unless you know how to go at it right. This puts you on the right road for practically any kind of cam you are likely to run up against. Third edition. **35 cents**

HYDRAULICS

Hydraulic Engineering.

By GARDNER D. HISCOX. A treatise on the properties, power, and resources of water for all purposes. Including the measurements of streams; the flow of water in pipes or conduits; the horse-power of falling water; turbine and impact water-wheels; wave-motors, centrifugal, reciprocating and air-lift pumps. With 300 figures and diagrams and 36 practical tables. 320 pages. **Price, $4.50**

ICE AND REFRIGERATION

Pocketbook of Refrigeration and Ice Making.

By A. J. WALLIS-TAYLOR. This is one of the latest and most comprehensive reference books published on the subject of refrigeration and cold storage. It explains the properties

and refrigerating effect of the different fluids in use, the management of refrigerating machinery and the contsruction and insulation of cold rooms with their required pipe surface for different degrees of cold; freezing mixtures and non-freezing brines, temperatures of cold rooms for all kinds of provisions, cold storage charges for all classes of goods, ice making and storage of ice, data and memoranda for constant reference by refrigerating engineers, with nearly one hundred tables containing valuable references to every fact and condition required in the installment and operation of a refrigerating plant. New edition just published. **Price, $2.00**

INVENTIONS—PATENTS

Inventor's Manual, How to Make a Patent Pay.

This is a book designed as a guide to inventors in perfecting their inventions, taking out their patents, and disposing of them. It is not in any sense a Patent Solicitor's circular nor a Patent Broker's advertisement. No advertisements of any description appear in the work. It is a book containing a quarter of a century's experience of a successful inventor, together with notes based upon the experience of many other inventors. Revised and enlarged second edition. Nearly 150 pages. Illustrated. **Price $1.25**

KNOTS

Knots, Splices and Rope Work.

By A. Hyatt Verrill. This is a practical book giving complete and simple directions for making all the most useful and ornamental knots in common use, with chapters on Splicing, Pointing, Seizing, Serving, etc. This book is fully illustrated with 154 original engravings, which show how each knot, tie or splice is formed, and its appearance when finished. The book will be found of the greatest value to campers, yachtsmen, travelers or Boy Scouts, in fact, to anyone having occasion to use or handle rope or knots for any purpose. The book is thoroughly reliable and practical, and is not only a guide but a teacher. It is the standard work on the subject. Second edition revised. 128 pages, 154 original engravings. **Price, $1.00**

LATHE WORK

Complete Practical Machinist.

By Joshua Rose. The new, twentieth revised and enlarged edition is now ready. This is one of the best-known books on machine-shop work, and written for the practical workman in the language of the workshop. It gives full, practical intsructions on the use of all kinds of metal-working tools, both hand and machine, and tells how the work should be properly done. It covers lathe work, vise work, drills and drilling, taps and dies, hardening and tempering, the making and use of tools, tool grinding, marking out work, machine tools, etc. No machinist's library is complete without this volume. 547 pages, 432 illustrations. (1920.) **Price $3.00**

The Lathe—Its Design, Construction and Operation, With Practical Examples of Lathe Work.

By Oscar E. Perrigo. A new revised edition, and the only complete American work on the subject, written by a man who knows not only how work ought to be done, but who also knows how to do it, and how to convey this knowledge to others. It is strictly up-to-date in its descriptions and illustrations. Lathe history and the relations of the lathe to manufacturing are given; also a description of the various devices for feeds and thread cutting mechanisms from early efforts in this direction to the present time. Lathe design is thoroughly discussed, including back gearing, driving cones, thread-cutting gears, and all the essential element of the modern lathe. The classification of lathes is taken up, giving the essential differences of the several types of lathes including, as is usually understood, engine lathes, bench lathes, speed lathes, forge lathes, gap lathes, pulley lathes, forming lathes, multiple-spindle lathes, rapid-reduction lathes, precision lathes, turret lathes, special lathes, electrically-driven lathes, etc. In addition to the complete exposition on construction and design, much practical matter on lathe installation, care and operation has been incorporated in the enlarged new edition. All kinds of lathe attachments for drilling, milling, etc., are described and complete instructions are given to enable the novice machinist to grasp the art of lathe operation as well as the principles involved in design. A number of difficult machining operations are described at length and illustrated. The new edition has nearly 500 pages and 350 illustrations. **Price, $3.00**

Turning and Boring Tapers.

By Fred H. Colvin. There are two ways to turn tapers; the right way and one other. This treatise has to do with the right way; it tells you how to start the work properly, how to set the lathe, what tools to use and how to use them, and forty and one other little things that you should follow. Fourth edition. **Price, 35 cents**

LIQUID AIR

Liquid Air and the Liquefaction of Gases.

By T. O'Conor Sloane. The third revised edition of this book has just been issued. Much new material is added to it; and the all important uses of liquid air and gas processes in modern industry, in the production especially of nitrogen compounds, are described. The book gives the history of the theory, discovery, and manufacture of Liquid Air, and contains an illustrated description of all the experiments that have excited the wonder of audiences all over the country. It shows how liquid air, like water, is carried hundreds of miles and is handled in open buckets. It tells what may be expected from it in the near future. A book that renders simple one of the most perplexng chemical problems of the century. Startling developments illustrated by actual experiments. It is not only a work of scientific interest and authority, but is intended for the general reader, being written in a popular style—easily understood by everyone. 400 pages fully illustrated. (1920.) **Price, $3.00**

Air-Brake Catechism.

By ROBERT H. BLACKALL. This book is a standard text book. It is the only practical and complete work published. Treats on the equipment manufactured by the Westinghouse Air Brake Company, including the E-T Locomotive Brake Equipment, the K (Quick-Service) Triple Valve for freight service; the L High Speed Triple Valve; the P-C Passenger Brake Equipment, and the Cross Compound Pump. The operation of all parts of the apparatus is explained in detail and a practical way of locating their peculiarities and remedying their defects is given. Endorsed and used by air-brake instructors and examiners on nearly every railroad in the United States. Twenty-sixth edition. 411 pages, fully illustrated with folding plates and diagrams. New edition.

Price, $2.50

Application of Highly Superheated Steam to Locomotives.

By ROBERT GARBE. A practical book which cannot be recommended too highly to those motive-power men who are anxious to maintain the highest efficiency in their locomotives. Contains special chapters on Generation of Highly Superheated Steam; Superheated Steam and the Two-Cylinder Simple Engine; Compounding and Superheating; Designs of Locomotive Superheaters; Constructive Details of Locomotives Using Highly Superheated Steam. Experimental and Working Results. Illustrated with folding plates and tables. Cloth.

Price, $3.00

Combustion of Coal and the Prevention of Smoke.

By WM. M. BARR. To be a success a fireman must be "Light on Coal." He must keep his fire in good condition, and prevent, as far as possible, the smoke nuisance. To do this, he should know how coal burns, how smoke is formed and the proper burning of fuel to obtain the best results. He can learn this, and more too, from Barr's "Combustion of Coal." It is an absolute authority on all questions relating to the firing of a locomotive. Fifth edition. Nearly 350 pages, fully illustrated.

Price, $1.50

Diary of a Round-House Foreman.

By T. S. REILLY. This is the greatest book of railroad experiences ever published. Containing a fund of information and suggestions along the line of handling men, organizing, etc., that one cannot afford to miss. 176 pages.

Price, $1.25

Link Motions, Valves and Valve Setting.

By FRED H. COLVIN, Associate Editor of "American Machinist." A handy book that clears up the mysteries of valve setting. Shows the different valve gears in use, how they work, and why. Piston and slide valves of different types are illustrated and explained. A book that every railroad man in the motive-power department ought to have. Fully illustrated. New revised and enlarged edition just published.

Price, 75 cents

Train Rule Examinations Made Easy.

By G. E. Collingwood. This is the only practical work on train rules in print. Every detail is covered, and puzzling points are explained in simple, comprehensive language, making it a practical treatise for the train dispatcher, engineman, trainman and all others who have to do with the movements of trains. Contains complete and reliable information of the Standard Code of Train Rules for single track. Shows signals in colors, as used on the different roads. Explains fully the practical application of train orders, giving a clear and definite understanding of all orders which may be used. Second edition revised. 256 pages. Fully illustrated with train signals in colors. **Price, $1.50**

Locomotive Boiler Construction.

By Frank A. Kleinhans. The only book showing how locomotive boilers are built in modern shops. Shows all types of boilers used; gives details of construction; practical facts, such as life of riveting punches and dies, work done per day, allowance for bending and flanging sheets and other data that means dollars to any railroad man. Second edition. 451 pages, 334 illustrations. Six folding plates. Cloth. **Price, $3.50**

Locomotive Breakdowns and Their Remedies.

By Geo. L. Fowler. Revised by Wm. W. Wood, Air-Brake Instructor. Pocket edition. It is out of the question to try and tell you about every subject that is covered in this pocket edition of Locomotive Breakdowns. Just imagine all the common troubles that an engineer may expect to happen some time, and then add all of the unexpected ones, troubles that could occur, but that you had never thought about, and you will find that they are all treated with the very best methods of repair. Walschaert Locomotive Valve Gear Troubles, Electric Headlight Troubles, as well as Questions and Answers on the Air Brake, are all included. Eighth edition. 294 pages. Fully illustrated. **Price, $1.50**

Locomotive Catechism.

By Robert Grimshaw. Twenty-eighth revised and enlarged edition. This may well be called an encyclopedia of the locomotive. Contains over 4,000 examination questions with their answers, including among them those asked at the first, second and third year's examinations. 825 pages, 437 illustrations and 3 folding plates. **Price, $2.50**

Westinghouse E. T. Air-Brake Instruction Pocket-book Catechism.

By Wm. W. Wood, Air-Brake Instructor. A practical work containing examination questions and answers on the E. T. Equipment. Covering what the E. T. Brake is. How it should be operated. What to do when defective. Not a question can be asked of the engineman up for promotion on either the No. 5 or the No. 6 E. T. equipment that is not asked and answered in the book. If you want to thoroughly understand the E. T. equipment get a copy of this book. It covers every detail. Makes air-brake troubles and examinations easy. Fully illustrated with colored plates, showing various pressures. Cloth. (1920.) **Price, $2.50**

Practical Instructor and Reference Book for Locomotive Firemen and Engineers.

By Chas. F. Lockhart. An entirely new book on the locomotive. It appeals to every railroad man, as it tells him how things are done and the right way to do them. Written by a man who has had years of practical experience in locomotive shops and on the road firing and running. The information given in this book cannot be found in any other similar treatise. Eight hundred and fifty-one questions with their answers are included, which will prove specially helpful to those preparing for examination. 368 pages, 88 illustrations. Cloth. **Price, $2.00**

Prevention of Railroad Accidents, or Safety in Railroading.

By George Bradshaw. This book is a heart-to-heart talk with railroad employees, dealing with facts, not theories, and showing the men in the ranks, from every-day experience, how accidents occur and how they may be avoided. The book is illustrated with seventy original photographs and drawings showing the safe and unsafe methods of work. No visionary schemes, no ideal pictures. Just plain facts and practical suggestions are given. Every railroad employee who reads the book is a better and safer man to have in railroad service. It gives just the information which will be the means of preventing many injuries and deaths. All railroad employees should procure a copy; read it, and do their part in preventing accidents. 169 pages. Pocket size. Fully illustrated. **Price, 50 cents**

Walschaert Locomotive Valve Gear.

By Wm. W. Wood. If you would thoroughly understand the Walschaert Valve Gear, you should possess a copy of this book. The author divides the subject into four divisions, as follows: I. Analysis of the gear. II. Designing and erection of the gear. III. Advantages of the gear. IV. Questions and answers relating to the Walschaert Valve Gear. This book is specially valuable to those preparing for promotion. Third edition. 245 pages. Fully illustrated. Cloth. **Price, $2.50**

MACHINE SHOP PRACTICE

Modern Machine Shop Construction, Equipment and Management.

By Oscar E. Perrigo. The only work published that describes the Modern Machine Shop or Manufacturing Plant from the time the grass is growing on the site intended for it until the finished product is shipped. Just the book needed by those contemplating the erection of modern shop buildings, the rebuilding and reorganization of old ones or the introduction of Modern Shop Methods, Time and Cost Systems. It is a book written and illustrated by a practical shop man for practical shop men who are too busy to read theories and want facts. It is the most complete all-around book of its kind ever published. Second edition. 384 pages, 219 original and specially-made illustrations. **Price, $5.00**

EVERY PRACTICAL MAN NEEDS

A MAGAZINE WHICH WILL TELL HIM HOW TO MAKE AND DO THINGS

HAVE US ENTER YOUR SUBSCRIPTION

to the best mechanical magazine on the market. Only Two Dollars a year for twelve numbers. Subscribe to-day to

EVERYDAY ENGINEERING

A monthly magazine devoted to practical mechanics for everyday men. Its aim is to popularize engineering as a science, teaching the elements of applied mechanics and electricity in a straightforward and understandable manner. The magazine maintains its own experimental laboratory, where the devices described in articles submitted to the Editor are first tried out and tested before they are published. This important innovation places the standard of the published material very high, and it insures accuracy and dependability.

The magazine is the only one in this country that specializes in practical model building. Articles in past issues have given comprehensive designs for many model boats, including submarines and chasers, model steam and gasoline engines, electric motors and generators, etc., etc. This feature is a permanent one in the magazine.

Another popular department is that devoted to automobiles and airplanes. Care, maintenance, and operation receive full and authoritative treatment. Every article is written from the practical, everyday man standpoint, rather than from that of the professional.

The magazine entertains while it instructs. It is a journal of practical, dependable information, given in a style that it may be readily assimilated and applied by the man with little or no technical training. The aim is to place before the man who leans toward practical mechanics a series of concise, crisp, readable talks on what is going on and *how it is done.* These articles are profusely illustrated with clear, snappy photographs, specially posed to illustrate the subject in the magazine's own studio by its own staff of technically-trained illustrators and editors.

The subscription price of the magazine is two dollars per year in U. S., two dollars and twenty-five cents in Canada and three dollars in foreign countries. Sample copy sent on receipt of twenty cents.

Machine Shop Arithmetic.

By COLVIN-CHENEY. Most popular book for shop men. Shows how all shop problems are worked out and "why." Includes change gears for cutting any threads; drills, taps, shink and force fits; metric system of measurements and threads. Used by all classes of mechanics and for instruction in Y. M. C. A. and other schools. Seventh edition. 131 pages. **Price, 75 cents.**

Abrasives and Abrasive Wheels.

By FRED B. JACOBS. A new book for everyone interested in abrasives or grinding. A careful reading of the book will not only make mechanics better able to use abrasives intelligently, but it will also tell the shop superintendent of many short cuts and efficiency-increasing kinks. The economic advantage in using large grinding wheels are fully explained, together with many other things that will tend to give the superintendent or workman a keen insight into abrasive engineering. 340 pages, 200 illustrations. This is an indispensable book for every machinist. **Price, $3.00**

American Tool Making and Interchangeable Manufacturing.

By J. V. WOODWORTH. In its 500-odd pages the one subject only, Tool Making, and whatever relates thereto, is dealt with. The work stands without a rival. It is a complete practical treatise on the art of American Tool Making and system of interchangeable manufacturing as carried on to-day in the United States. In it are described and illustrated all of the different types and classes of small tools, fixtures, devices and special appliances which are in general use in all machine-manufacturing and metal-working establishments where economy, capacity and interchangeability in the production of machined metal parts are imperative. The science of jig making is exhaustively discussed, and particular attention is paid to drill jigs, boring, profiling and milling fixtures and other devices in which the parts to be machined are located and fastened within the contrivances. All of the tools, fixtures and devices illustrated and described have been or are used for the actual production of work, such as parts of drill presses, lathes, patented machinery, typewriters, electrical apparatus, mechanical appliances, brass goods, composition parts, mould products, sheet metal articles, drop forgings, jewelry, watches, medals, coins, etc. Second edition. 531 pages. **Price, $4.50**

Henley's Encyclopedia of Practical Engineering and Allied Trades.

Edited by JOSEPH G. HORNER, A.M.I.Mech.E. This book covers the entire practice of Civil and Mechanical Engineering. The best known experts in all branches of engineering have contributed to these volumes. The Cyclopedia is admirably well adapted to the needs of the beginner and the self-taught practical man, as well as the mechanical engineer, designer, draftsman, shop superintendent, foreman and machinist.

It is a modern treatise in five volumes. Handsomely bound in half morocco, each volume containing nearly 500 pages, with thousands of illustrations, including diagrammatic and sectional drawings with full explanatory details.

Price, $30.00. For the complete set of five volumes.

THE WHOLE FIELD OF MECHANICAL MOVEMENTS COVERED BY MR. HISCOX'S TWO BOOKS

We publish two books by Gardner D. Hiscox that will keep you from "inventing" things that have been done before, and suggest ways of doing things that you have not thought of before. Many a man spends time and money, pondering over some mechanical problem, only to learn, after he has solved the problem, that the same thing has been accomplished and put in practice by others long before. Time and money spent in an effort to accomplish what has already been accomplished are time and money lost. The whole field of mechanics, every known mechanical movement, and practically every device is covered by these two books. If the thing you want has been invented, it is illustrated in them. If it hasn't been invented, then you'll find in them the nearest things to what you want, some movement or device that will apply in your case, perhaps; or which will give you a key from which to work. No book or set of books ever published is of more real value to the inventor, draftsman or practical mechanic than the two volumes described below.

Mechanical Movements, Powers and Devices.

By GARDNER D. HISCOX. This is a collection of 1,890 engravings of different mechanical motions and appliances, accompanied by appropriate text, making it a book of great value to the inventor, the draftsman, and to all readers with mechanical tastes. The book is divided into eighteen sections or chapters, in which the subject-matter is classified under the following heads: Mechanical Powers; Transmission of Power; Measurement of Power; Steam Power; Air Power Appliances; Electric Power and Construction; Navigation and Roads; Gearing; Motion and Devices; Controlling Motion; Horological; Mining; Mill and Factory Appliances; Construction and Devices; Drafting Devices; Miscellaneous Devices, etc. Fifteenth edition. 400 octavo pages.

Price, $4.00

Mechanical Appliances, Mechanical Movements and Novelties of Construction.

By GARDNER D. HISCOX. This is a supplementary volume to the one upon mechanical movements. Unlike the first volume, which is more elementary in character, this volume contains illustrations and descriptions of many combinations of motions and of mechanical devices and appliances found in different lines of machinery, each device being shown by a line drawing with a description showing its working parts and the method of operation. From the multitude of devices described and illustrated might be mentioned, in passing, such items as conveyors and elevators, Prony brakes, thermometers, various types of boilers, solar engines, oil-fuel burners, condensers, evaporators, Corliss and other valve gears, governors, gas engines, water motors of various descriptions, air ships, motors and dynamos, automobiles and motor bicycles, railway lock signals, car couplers, link and gear motions, ball bearings, breech block mechanism for heavy guns, and a large accumulation of others of equal importance. 1,000 specially made engravings. 396 octavo pages. Fourth revised edition. **Price, $4.00**

"Shop Kinks."

By ROBERT GRIMSHAW. This shows special methods of doing work of various kinds, and releasing cost of production. Has hints and kinks from some of the largest shops in this country and Europe. You are almost sure to find some that apply to your work, and in such a way as to save time and trouble. 400 pages. Fifth edition. Cloth. **Price, $3.00**

Machine Shop Tools and Shop Practice.

By W. H. VANDERVOORT. A work of 555 pages and 673 illustrations, describing in every detail the construction, operation, and manipulation of both hand and machine tools. Includes chapters on filing, fitting, and scraping surfaces; on drills, reamers, taps, and dies; the lathe and its tools; planers, shapers, and their tools; milling machines and cutters; gear cutters and gear cutting; drilling machines and drill work; grinding machines and their work; hardening and tempering; gearing, belting, and transmission machinery; useful data and tables. Sixth edition. Cloth. **Price, $4.50**

Model Making.

By RAYMOND FRANCIS YATES. A new book for the mechanic and model maker. This is the first book of its kind to be published in this country and all those interested in model engineering should have a copy. The first eight chapters are devoted to such subjects as Silver Soldering, Heat Treatment of Steel, Lathe Work, Pattern Making, Grinding, etc. The remaining twenty-four chapters describe the construction of various models such as rapid fire naval guns, speed boats, model steam engines, turbines, etc.

This book must not be confused with those describing the construction of toys now on the market. It is a practical treatise on model engineering and construction. 400 pages. 301 illustrations. **Price, $3.00**

The Modern Machinist.

By JOHN T. USHER. This book might be called a compendium of shop methods, showing a variety of special tools and appliances which will give new ideas to many mechanics from the superintendent down to the man at the bench. It will be found a valuable addition to any machinist's library and should be consulted whenever a new or difficult job is to be done, whether it is boring, milling, turning, or planing, as they are all treated in a practical manner. Fifth edition. 320 pages, 250 illustrations. Cloth. **Price, $2.50**

Threads and Thread Cutting.

By COLVIN and STABEL. This clears up many of the mysteries of thread cutting, such as double and triple threads, internal threads, catching threads, use of hobs, etc. Contains a lot of useful hints and several tables. Third edition. **35 cents**

MARINE ENGINEERING

The Naval Architect's and Shipbuilder's Pocket-book

of Formulæ, Rules, and Tables and Marine Engineer's and Surveyor's Handy Book of Reference. By CLEMENT MACKROW and LLOYD WOOLLARD. The eleventh revised and enlarged edition of this most comprehensive work has just been issued. It is absolutely indispensable to all engaged in the Shipbuilding Industry, as it condenses into a compact form all data and formulæ that are ordinarily required. The book is completely up to date, including among other subjects a section on Aeronautics. 750 pages, limp leather binding.

Price, $6.00 net

Marine Engines and Boilers, Their Design and Construction. The Standard Book.

By DR. G. BAUER, LESLIE S. ROBERTSON and S. BRYAN DONKIN. In the words of Dr. Bauer, the present work owes its origin to an oft felt want of a condensed treatise embodying the theoretical and practical rules used in designing marine engines and boilers. The need of such a work has been felt by most engineers engaged in the construction and working of marine engines, not only by the younger men, but also by those of greater experience. The fact that the original German work was written by the chief engineer of the famous Vulcan Works, Stettin, is in itself a guarantee that this book is in all respects thoroughly up-to-date, and that it embodies all the information which is necessary for the design and construction of the highest types of marine engines and boilers. It may be said that the motive power which Dr. Bauer has placed in the fast German liners that have been turned out of late years from the Stettin Works represent the very best practice in marine engineering of the present day. The work is clearly written, thoroughly systematic, theoretically sound; while the character of the plans, drawings, tables, and statistics is without reproach. The illustrations are careful reproductions from actual working drawings, with some well-executed photographic views of completed engines and boilers. 744 pages, 550 illustrations, and numerous tables. Cloth. **Price, $10.00 net**

MANUAL TRAINING

Economics of Manual Training.

By LOUIS ROUILLION. The only book that gives just the information needed by all interested in manual training, regarding buildings, equipment and supplies. Shows exactly what is needed for all grades of the work from the Kindergarten to the High and Normal School. Gives itemized lists of everything needed and tells just what it ought to cost. Also shows where to buy supplies. Illustrated. Second edition. Cloth. **Price, $2.00**

MINING

Prospector's Field-Book and Guide.

By H. S. Osborn. 1920 edition, revised and enlarged by M. W. von Bernewitz. The last edition of this volume was published in 1910. It and the previous seven editions were suitable for those times. The new ninth (1920) edition will be found suitable for the present time. While the old-time prospector will always be an important factor, the knowledge of and search for the common and rarer minerals is bringing out men who are trained to some degree. In the field they need a handy and suggestive pocket-book containing hints on prospecting—where to search and how to test—couched in simple terms. The chapter on preliminary instructions covers the fundamentals of a study of the earth's crust. Then follow discussions on practical mineralogy, crystallography, the value of the blowpipe in prospecting, surveying, and chemical tests in the field. Separate chapters are given to the precious and base metals, also to the non-metallic minerals. The chapter on the non-ferrous or alloy group of minerals is entirely new, while the section on oil has been expanded. Surficial indications for copper receive full attention. The chapter on gems has been rewritten and matters concerning gemstones used for industrial purposes, such as abrasives, included. A general chapter covers many useful minerals and salts. An important guide and suggestive aid throughout the new book are the many brief descriptions of ore deposits of all minerals occurring in scattered parts of the world. No other prospector's book contains this class of information. In the appendix will be found numbers of useful tables, and a complete glossary of mining and mineralogical terms. The ninth edition of Osborn's "Prospector's Field Book and Guide" will be found up to date, worth while, and full value for the money asked. Flexible fabrikoid. 375 pages. 57 illustrations. 1920 edition. **Price, $3.00**

PATTERN MAKING

Practical Pattern Making.

By F. W. Barrows. This book, now in its second edition, is a comprehensive and entirely practical treatise on the subject of pattern making, illustrating pattern work in both wood and metal, and with definite instructions on the use of plaster of paris in the trade. It gives specific and detailed descriptions of the materials used by pattern makers and describes the tools; both those for the bench and the more interesting machine tools; having complete chapters on the lathe, the circular saw and the band saw. It gives many examples of pattern work, each one fully illustrated and explained with much detail. These examples, in their great variety, offer much that will be found of interest to all pattern makers, and especially to the younger ones, who are seeking information on the more advanced branches of their trade. Containing nearly 350 pages and 170 illustrations. Second edition, revised and enlarged. **Price, $2.50**

PERFUMERY

Henley's Twentieth Century Book of Receipts, Formulas and Processes.

Edited by G. D. Hiscox. The most valuable techno-chemical receipt book published. Contains over 10,000 practical receipts, many of which will prove of special value to the perfumer. **Price, $4.00**

Perfumes and Cosmetics, Their Preparation and Manufacture.

By G. W. Askinson, Perfumer. A comprehensive treatise, in which there has been nothing omitted that could be of value to the perfumer or manufacturer of toilet preparations. Complete directions for making handkerchief perfumes, smelling-salts, sachets, fumigating pastiles; preparations for the care of the skin, the mouth, the hair, cosmetics, hair dyes and other toilet articles are given, also a detailed description of aromatic substances; their nature, tests of purity, and wholesale manufacture, including a chapter on synthetic products, with formulas for their use. A book of general, as well as professional interest, meeting the wants not only of the druggist and perfume manufacturer, but also of the general public. Fourth edition much enlarged and brought up-to-date. Nearly 400 pages, illustrated. **$5.00**

PLUMBING

Standard Practical Plumbing.

By R. M. Starbuck. This is a complete treatise and covers the subject of modern plumbing in all its branches. It treats exhaustively on the skilled work of the plumber and the theory underlying plumbing devices and operations, and commends itself at once to anyone working in any branch of the plumbing trade. A large amount of space is devoted to a very complete and practical treatment of the subjects of hot water supply, circulation and range boiler work. Another valuable feature is the special chapter on drawing for plumbers. The illustrations, of which there are three hundred and forty-seven, one hundred being full-page plates, were drawn expressly for this book and show the most modern and best American practice in plumbing construction. 6½ x 9¼. Cloth, 406 pages, 347 illustrations. **Price, $3.50**

Mechanical Drawing for Plumbers.

By R. M. Starbuck. A concise, comprehensive and practical treatise on the subject of mechanical drawing in its various modern applications to the work of all who are in any way connected with the plumbing trade. Nothing will so help the plumber in estimating and in explaining work to customers and workmen as a knowledge of drawing, and to the workman it is of inestimable value if he is to rise above his position to positions of greater responsibility. 150 illustrations. **Price, $2.00**

Modern Plumbing Illustrated.

By R. M. STARBUCK. The author of this book, Mr. R. M. Starbuck, is one of the leading authorities on plumbing in the United States. The book represents the highest standard of plumbing work. A very comprehensive work, illustrating and describing the drainage and ventilation of dwellings, apartments and public buildings. The very latest and most approved methods in all branches of sanitary installation are given. The standard book for master plumbers, architects, builders, plumbing inspectors, boards of health, boards of plumbing examiners and for the property owner, as well as the workman and apprentice. It contains fifty-seven entirely new and large full pages of illustrations with descriptive text, all of which have been made specially for this work. These plates show all kinds of modern plumbing work. Each plate is accompanied by several pages of text, giving notes and practical suggestions, sizes of pipe, proper measurements for setting up work, etc. Suggestions on estimating plumbing construction are also included. 407 octavo pages, fully illustrated by 57 full-page engravings. **Price, $5.00**

RECIPE BOOK

Henley's Twentieth Century Book of Recipes, Formulas and Processes.

Edited by GARDNER D. HISCOX. The most valuable techno-chemical formulæ book published, including over 10,000 selected scientific, chemical, technological and practical recipes and processes. This book of 800 pages is the most complete book of recipes ever published, giving thousands of recipes for the manufacture of valuable articles for everyday use. Hints, helps, practical ideas and secret processes are revealed within its pages. It covers every branch of the useful arts and tells thousands of ways of making money and is just the book everyone should have at his command. The pages are filled with matters of intense interest and immeasurable practical value to the photographer, the perfumer, the painter, the manufacturer of glues, pastes, cements and mucilages, the physician, the druggist, the electrician, the dentist, the engineer, the foundryman, the machinist, the potter, the tanner, the confectioner, the chiropodist, the manufacturer of chemical novelties and toilet preparations, the dyer, the electroplater, the enameler, the engraver, the provisioner, the glass worker, the goldbeater, the watchmaker and jeweler, the ink manufacturer, the optician, the farmer, the dairyman, the paper maker, the metal worker, the soap maker, the veterinary surgeon, and the technologist in general. A book to which you may turn with confidence that you will find what you are looking for. A mine of information up-to-date in every respect. Contains an immense number of formulas that every one ought to have that are not found in any other work. 1920 edition. Cloth binding. **Price, $4.00**

RUBBER

Henley's Twentieth Century Book of Receipts, Formulas and Processes.

Edited by GARDNER D. HISCOX. Contains upward of 10,000 practical receipts, including among them formulas on artificial rubber. **Price, $4.00**

Rubber Hand Stamps and the Manipulation of India Rubber.

By T. O'CONOR SLOANE. This book gives full details of all points, treating in a concise and simple manner the elements of nearly everything it is necessary to understand for a commencement in any branch of the India rubber manufacture. The making of all kinds of rubber hand stamps, small articles of India rubber, U. S. Government composition, dating hand stamps, the manipulation of sheet rubber, toy balloons, India rubber solutions, cements, blackings, renovating varnish, and treatment for India rubber shoes, etc.; the hektograph stamp inks, and miscellaneous notes, with a short account of the discovery, collection and manufacture of India rubber are set forth in a manner designed to be readily understood, the explanation being plain and simple. Third edition. 175 pages, illustrated. **Price, $1.25**

SAWS

Saw Filing and Management of Saws.

By ROBERT GRIMSHAW. A practical hand book on filing, gumming, swaging, hammering and the brazing of band saws, the speed, work, and power to run circular saws, etc. A handy book for those who have charge of saws, or for those mechanics who do their own filing, as it deals with the proper shape and pitches of saw teeth of all kinds and gives many useful hints and rules for gumming, setting, and filing, and is a practical aid to those who use saws for any purpose. Third edition, revised and enlarged. Illustrated. **Price, $1.50**

SCREW CUTTING

Threads and Thread Cutting.

By COLVIN and STABLE. This clears up many of the mysteries of thread cutting, such as double and triple threads, internal threads, catching threads, use of hobs, etc. Contains a lot of useful hints and several tables. Third edition. **35 cents**

STEAM ENGINEERING

Horse-power Chart.

Shows the horse-power of any stationary engine without calculation. No matter what the cylinder diameter or stroke; the steam pressure or cut-off; the revolutions, or whether condensing or non-condensing, it's all there. Easy to use, accurate, and saves time and calculations. Especially useful to engineers and designers. **Price, 50 cents**

Steam Engine Troubles.

By H. HAMKENS. It is safe to say that no book has ever been published which gives the practical engineer such valuable and comprehensive information on steam engine design and troubles. There are descriptions of cylinders, valves, pistons, frames, pillow blocks and other bearings, connecting rods, wristplates, dashpots, reachrods, valve gears, governors, piping, throttle and emergency valves, safety stops, flywheels, oilers, etc. If there is any trouble with these parts, the book gives you the reasons and tells how to remedy them. 350 pages, 276 illustrations. **Price, $2.50**

American Stationary Engineering.

By W. E. CRANE. A new book by a well-known author. Begins at the boiler room and takes in the whole power plant. Contains the result of years of practical experience in all sorts of engine rooms and gives exact information that cannot be found elsewhere. It's plain enough for practical men and yet of value to those high in the profession. Has a complete examination for a license. Third edition revised and enlarged. 345 pages. 131 illustrations. Cloth. **Price, $2.50**

Steam Engine Catechism.

By ROBERT GRIMSHAW. This volume of 413 pages is not only a catechism on the question and answer principle, but it contains formulas and worked-out answers for all the steam problems that appertain to the operation and management of the steam engine. Sixteenth edition. **Price, $2.00**

Boiler Room Chart.

By GEO. L. FOWLER. A chart—size 14 x 28 inches—showing in isometric perspective the mechanism belonging in a modern boiler room. The various parts are shown broken or removed, so that the internal construction is fully illustrated. Each part is given a reference number, and these, with the corresponding name, are given in a glossary printed at the sides. **Price, 25 cents**

Engine Runner's Catechism.

By ROBERT GRIMSHAW. Tells how to erect, adjust and run the principal steam engines in use in the United States. The work is of a handy size for the pocket. To young engineers this catechism will be of great value, especially to those who may be preparing to go forward to be examined for certificates of competency; and to engineers generally it will be of no little service, as they will find in this volume more really practical and useful information than is to be found anywhere else within a like compass. 387 pages. Seventh edition. **Price, $2.00**

Modern Steam Engineering in Theory and Practice.

By GARDNER D. HISCOX. This is a complete and practical work issued for stationary engineers and firemen dealing with the care and management of boilers, engines, pumps, superheated steam, refrigerating machinery, dynamos, motors, elevators, air compressors, and all other branches with which the modern engineer must be familiar. Nearly 200 questions with their answers on steam and electrical engineering, likely to be asked by the examining board, are included. Third edition. 487 pages, 405 engravings. Cloth. **Price, $3.50**

Steam Engineer's Arithmetic.

By COLVIN-CHENEY. A practical pocket book for the steam engineer. Shows how to work the problems of the engine room and shows "why." Tells how to figure horse-power of engines and boilers; area of boilers; has tables of areas and circumferences; steam tables; has a dictionary of engineering terms. Puts you onto all of the little kinks in figuring whatever there is to figure around a power plant. Tells you about the heat unit; absolute zero; adiabatic expansion; duty of engines; factor of safety; and 1,001 other things; and everything is plain and simple—not the hardest way to figure, but the easiest. Second edition. **Price, 75 cents**

STEAM HEATING and VENTILATING

Practical Steam, Hot-Water Heating and Ventilation.

By A. G. KING. This book has been prepared for the use of all engaged in the business of steam, hot-water heating and ventilation. Tells how to get heating contracts, how to install heating and ventilating apparatus, the best business methods to be used, with "Tricks of the Trade" for shop use. Rules and data for estimating radiation and cost and such tables and information as make it an indispensable work for everyone interested in steam, hot-water heating and ventilation. It describes all the principal systems of steam, hot-water, vacuum, vapor and vacuum-vapor heating, together with the new accelerated systems of hot-water circulation, including chapters on up-to-date methods of ventilation and the fan or blower system of heating and ventilation. Second edition. 367 pages, 300 detailed engravings. Cloth. **$3.50**

500 Plain Answers to Direct Questions on Steam, Hot-Water, Vapor and Vacuum Heating Practice.

By ALFRED G. KING. This work, just off the press, is arranged in question and answer form; it is intended as a guide and text-book for the younger inexperienced fitter and as a reference book for all fitters. All long and tedious discussions and descriptions formerly considered so important have been eliminated, and the theory and laws of heat and the various old and modern methods and appliances used for heating and ventilating are treated in a concise manner. This is the standard Question and Answer examination book on Steam and Hot Water Heating, etc. 200 pages, 127 illustrations. Octavo. Cloth. **Price, $2.00**

STEEL

Hardening, Tempering, Annealing and Forging of Steel.

By J. V. WOODWORTH. A book containing special directions for the successful hardening and tempering of all steel tools. Milling cutters, taps, thread dies, reamers, both solid and shell, hollow mills, punches and dies, and all kinds of sheet-

metal working tools, shear blades, saws, fine cutlery and metal-cutting tools of all descriptions, as well as for all implements of steel, both large and small, the simplest, and most satisfactory hardening and tempering processes are presented. 320 pages, 250 illustrations. Fourth edition. Cloth. **Price, $3.00**

Steel: Its Selection, Annealing, Hardening and Tempering.

By E. R. Markham. This work was formerly known as "The American Steel Worker," but on the publication of the new, revised edition, the publishers deemed it advisable to change its title to a more suitable one. This is the standard work on hardening, tempering, and annealing steel of all kinds. This book tells how to select, and how to work, temper, harden, and anneal steel for everything on earth. It is the standard book on selecting, hardening, and tempering all grades of steel. 400 pages. Very fully illustrated. Fourth edition. **Price, $3.00**

TRACTORS

The Modern Gas Tractor.

By Victor W. Pagé. A complete treatise describing all types and sizes of gasoline, kerosene, and oil tractors. Considers design and construction exhaustively, gives complete instruction for care, operation and repair, outlines all practical applications on the road and in the field. The best and latest work on farm tractors and tractor power plants. A work needed by farmers, students, blacksmiths, mechanics, salesmen, implement dealers, designers, and engineers. Second edition revised and much enlarged. 504 pages. Nearly 300 illustrations and folding plates. **Price, $3.00**

TURBINES

Marine Steam Turbines.

By Dr. G. Bauer and O. Lasche. Assisted by E. Ludwig and H. Vogel. Translated from the German and edited by M. G. S. Swallow. The book is essentially practical and discusses turbines in which the full expansion of steam passes through a number of separate turbines arranged for driving two or more shafts, as in the Parsons system, and turbines in which the complete expansion of steam from inlet to exhaust pressure occurs in a turbine on one shaft, as in the case of the Curtis machines. It will enable a designer to carry out all the ordinary calculation necessary for the construction of steam turbines, hence it fills a want which is hardly met by larger and more theoretical works. Numerous tables, curves and diagrams will be found, which explain with remarkable lucidity the reason why turbine blades are designed as they are, the course which steam takes through turbines of various types, the thermodynamics of steam turbine calculation, the influence of vacuum on steam consumption of steam turbines, etc. In a word, the very information which a designer and builder of steam turbines most requires. Large octavo, 214 pages. Fully illustrated and containing 18 tables, including an entropy chart. **Price, $4.00 net**